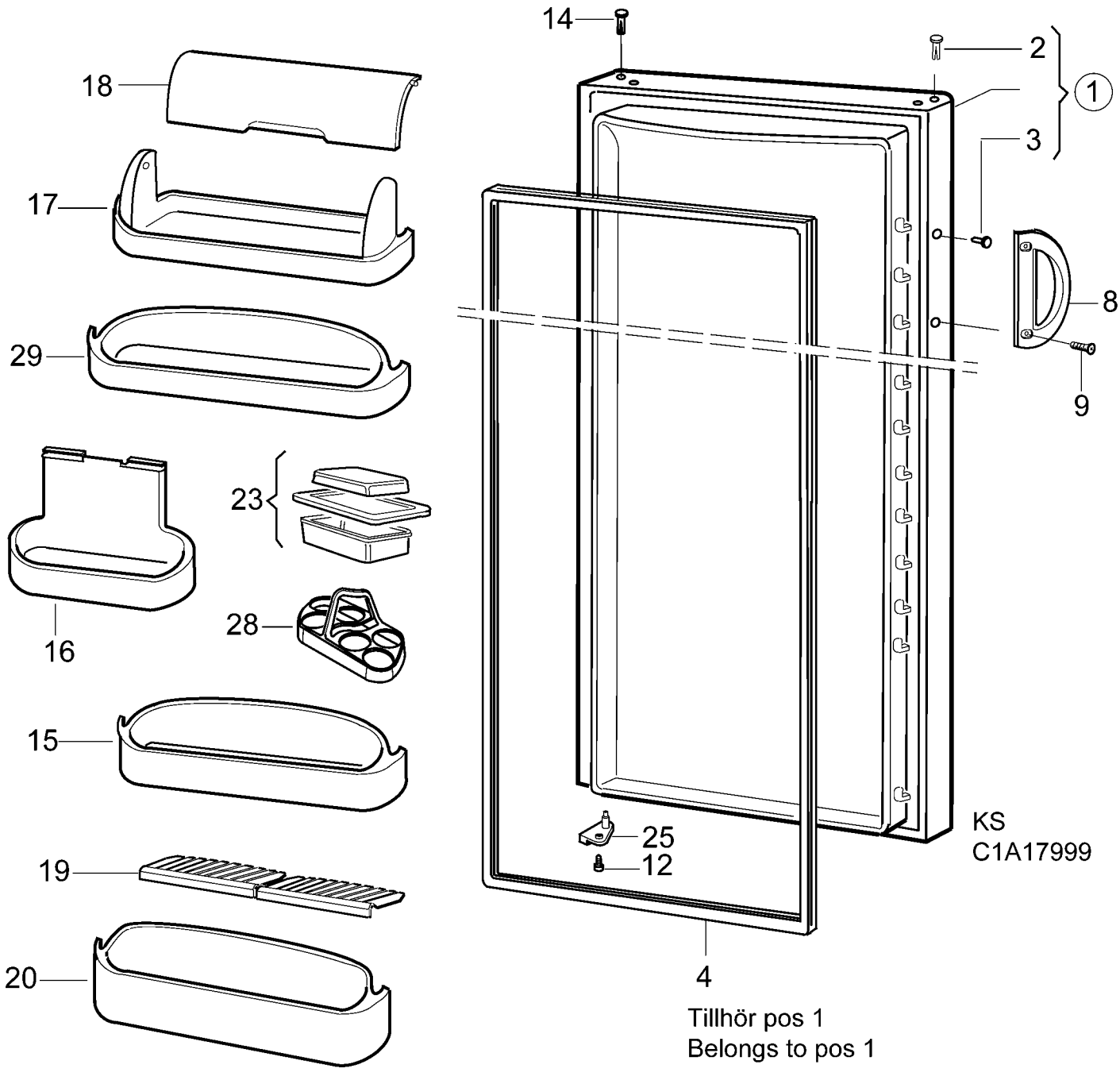
14
2
1
18
3
17
8
29
9
23
16
28
15
25
12
19
20
4
KS
C1A17999
Tillhör pos 1
Belongs to pos 1