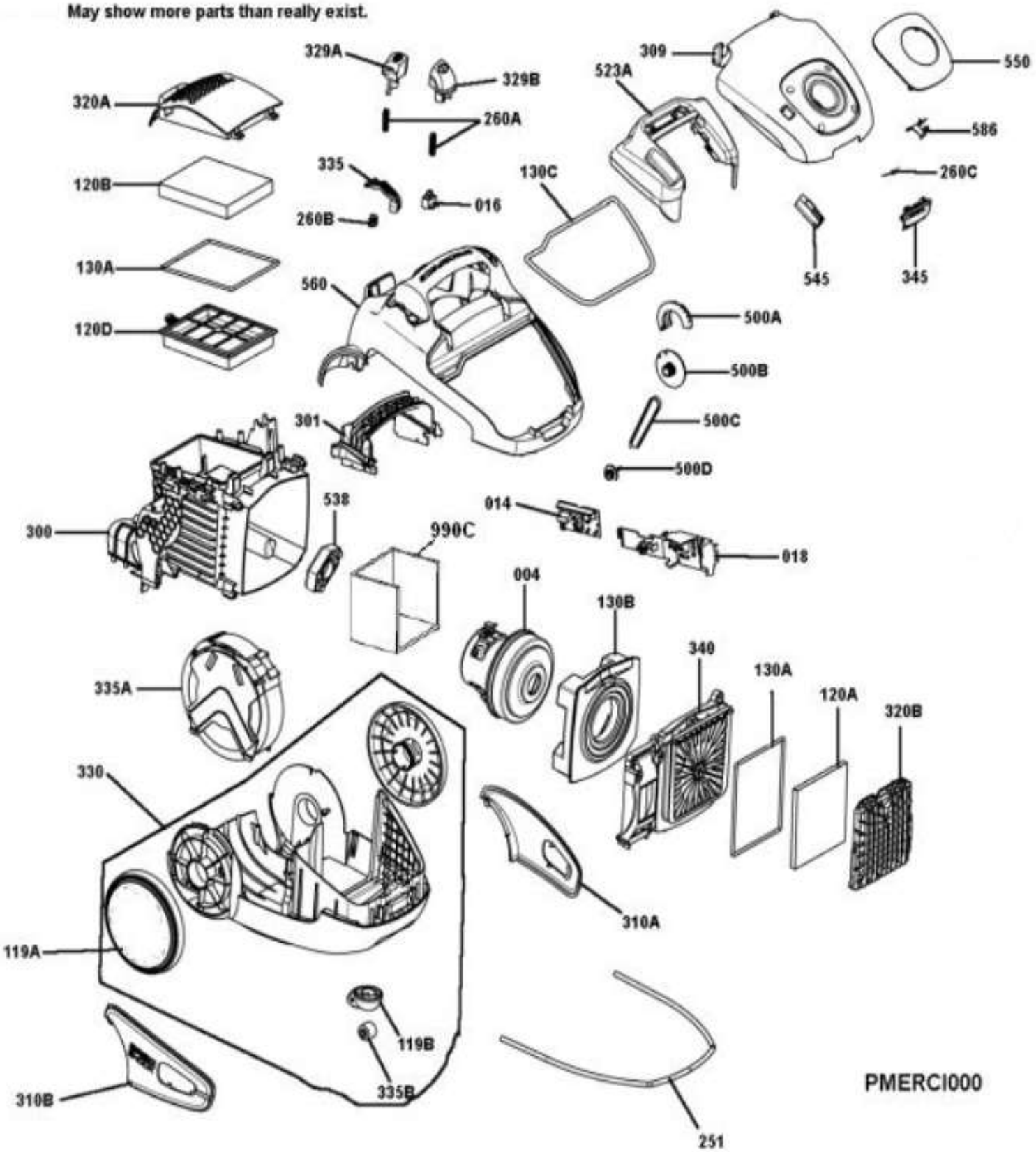May show more parts than really exist.