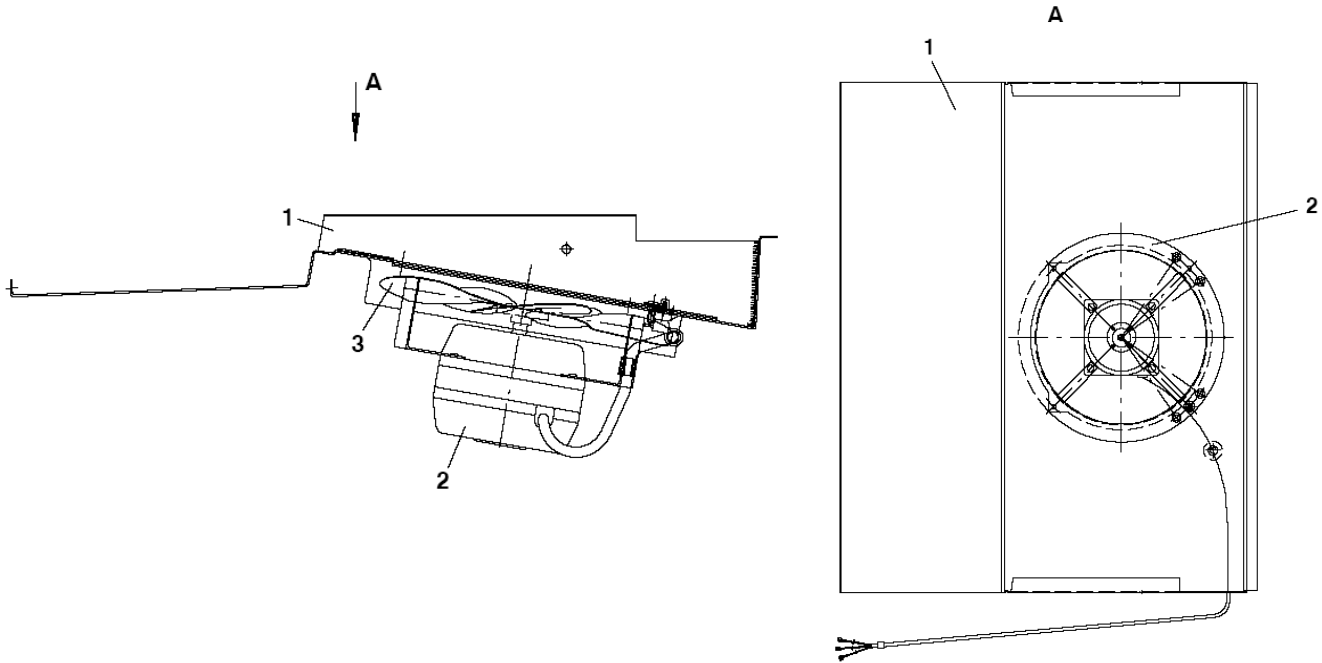
A
1
3
2
A
1
2