Model: FWA2118R

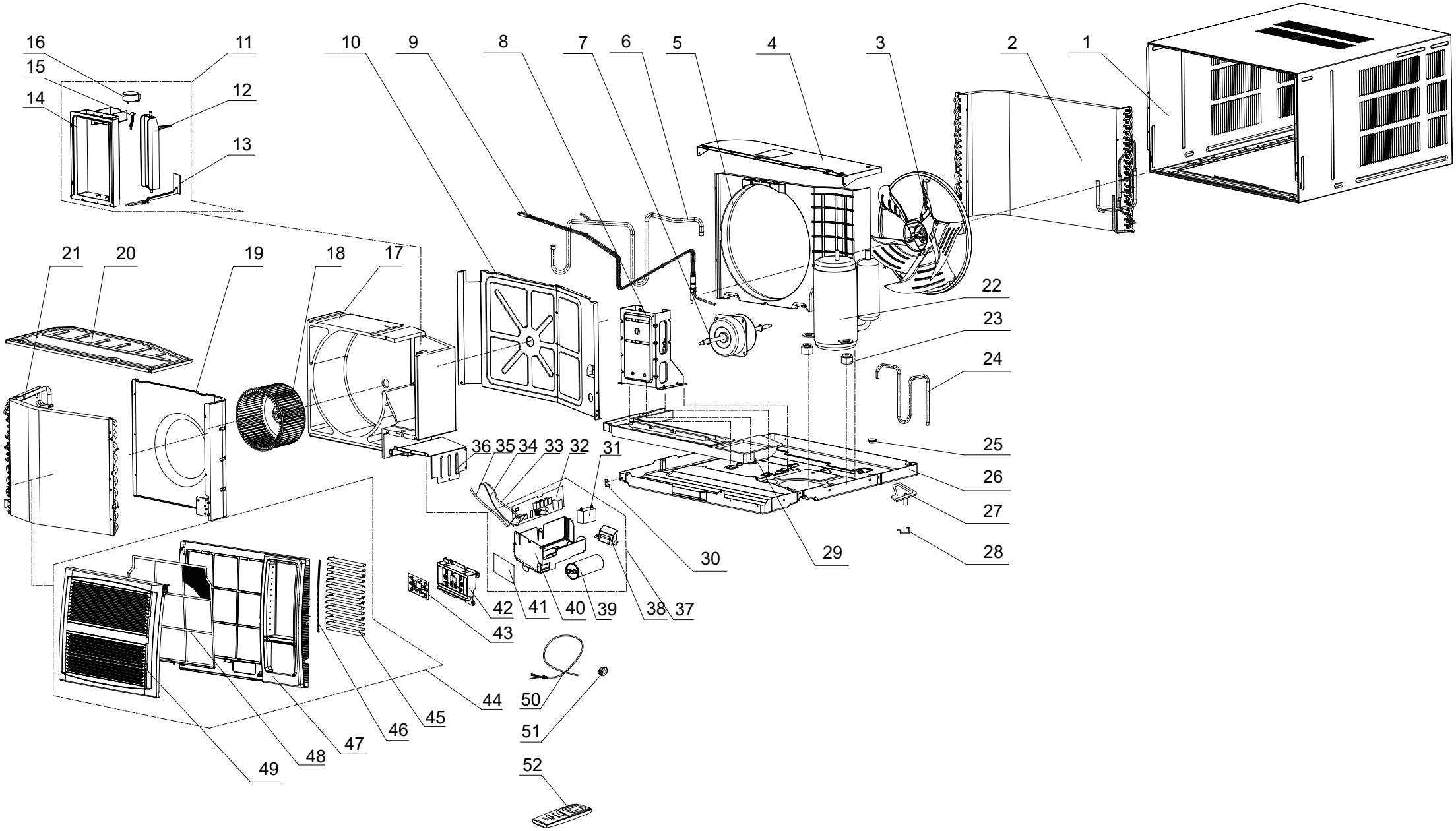

The component picture is only for reference please refer to the actual product.
Panel outlook picture, just for reference, please take the real unit as standard.