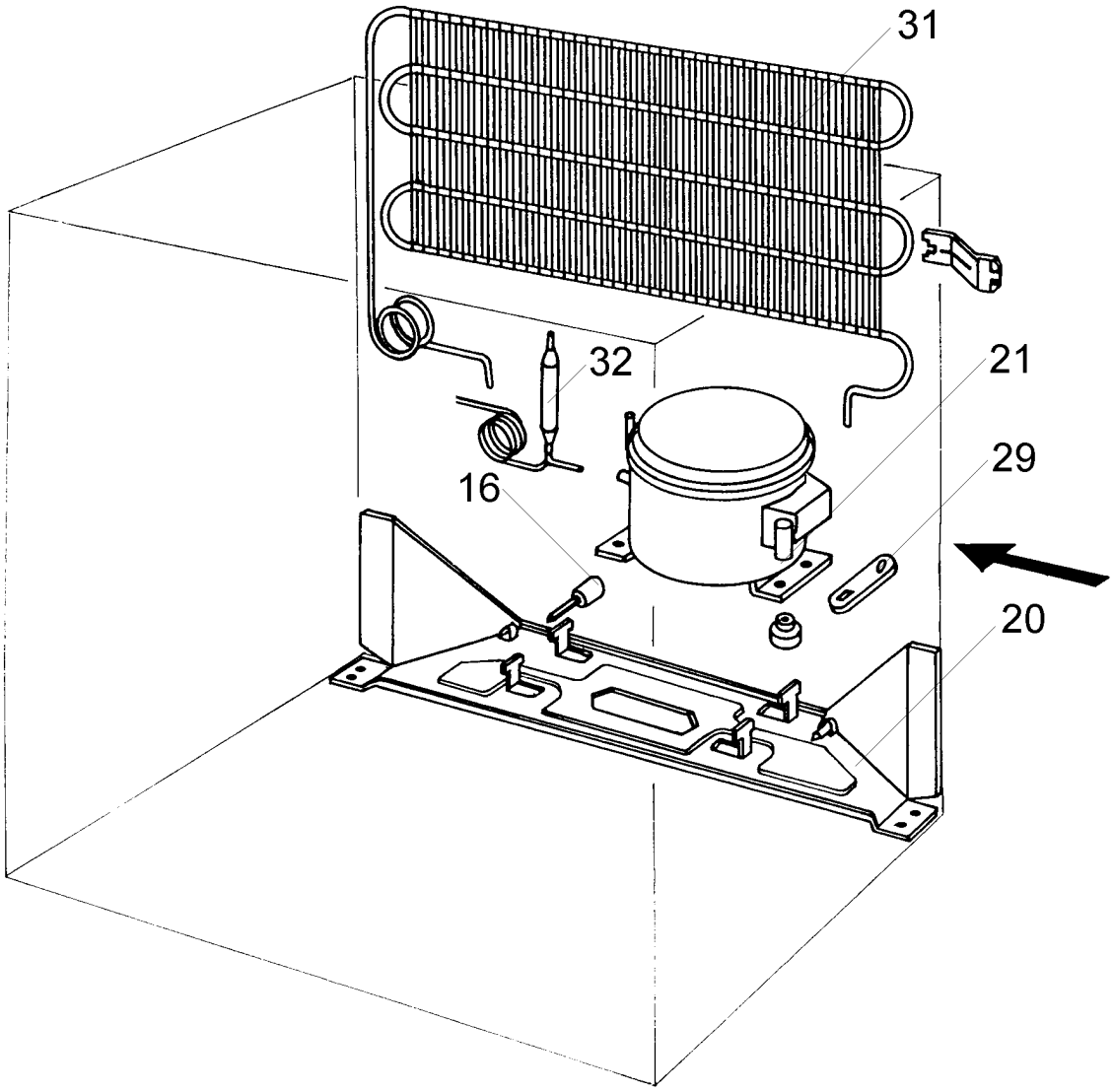

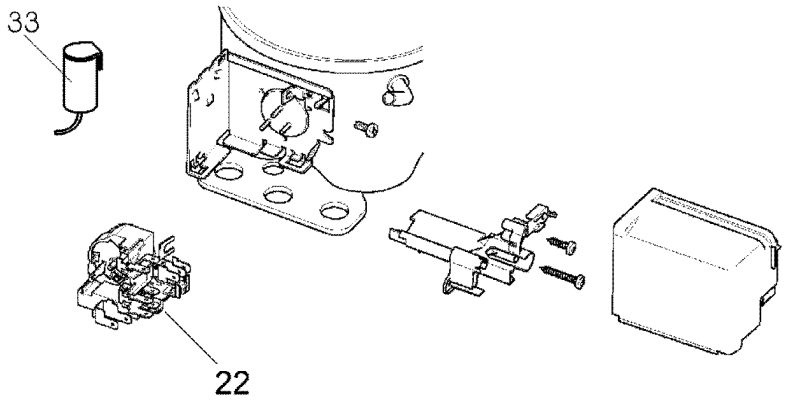

FB50IKOOKC