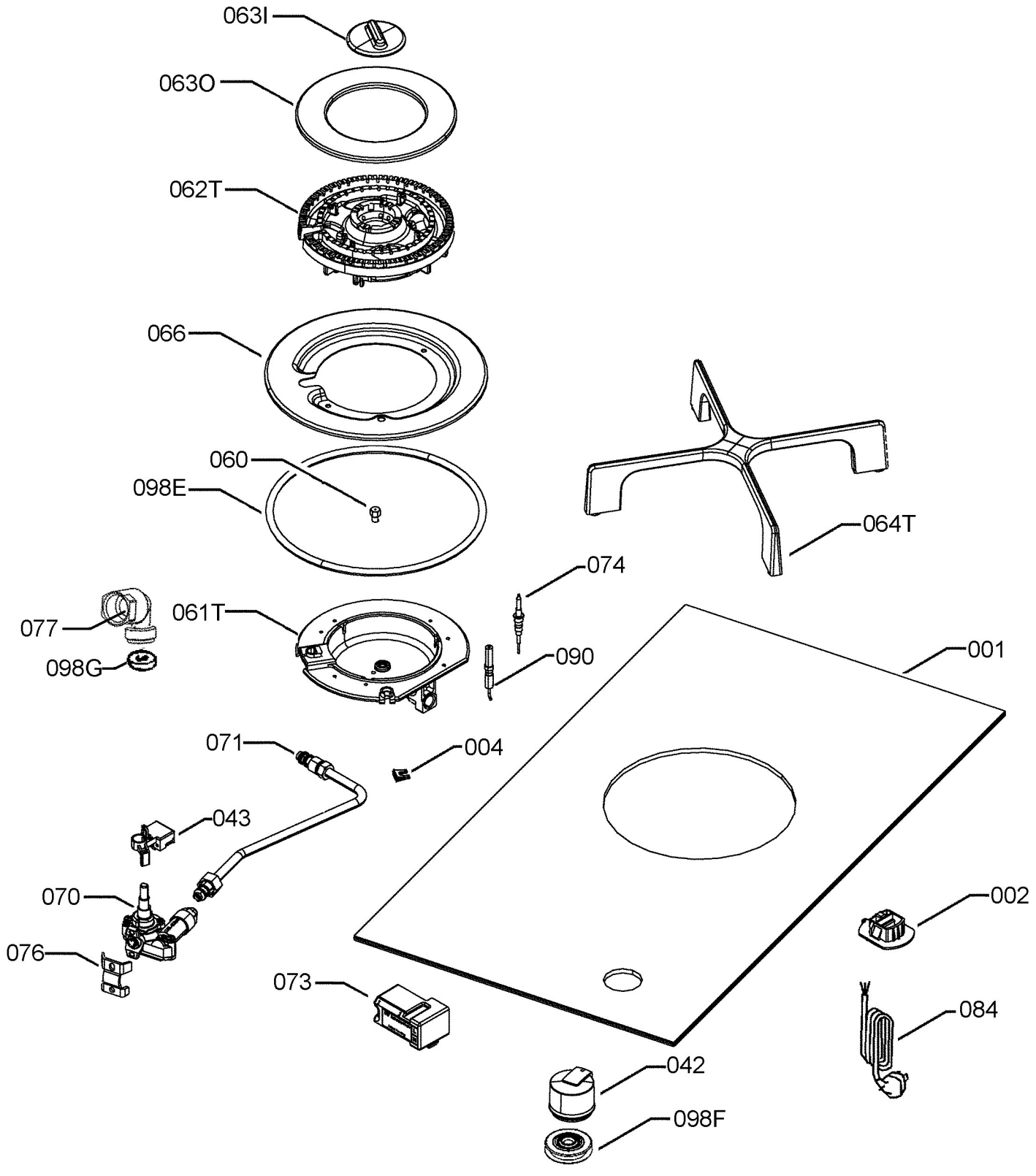

P09493069071