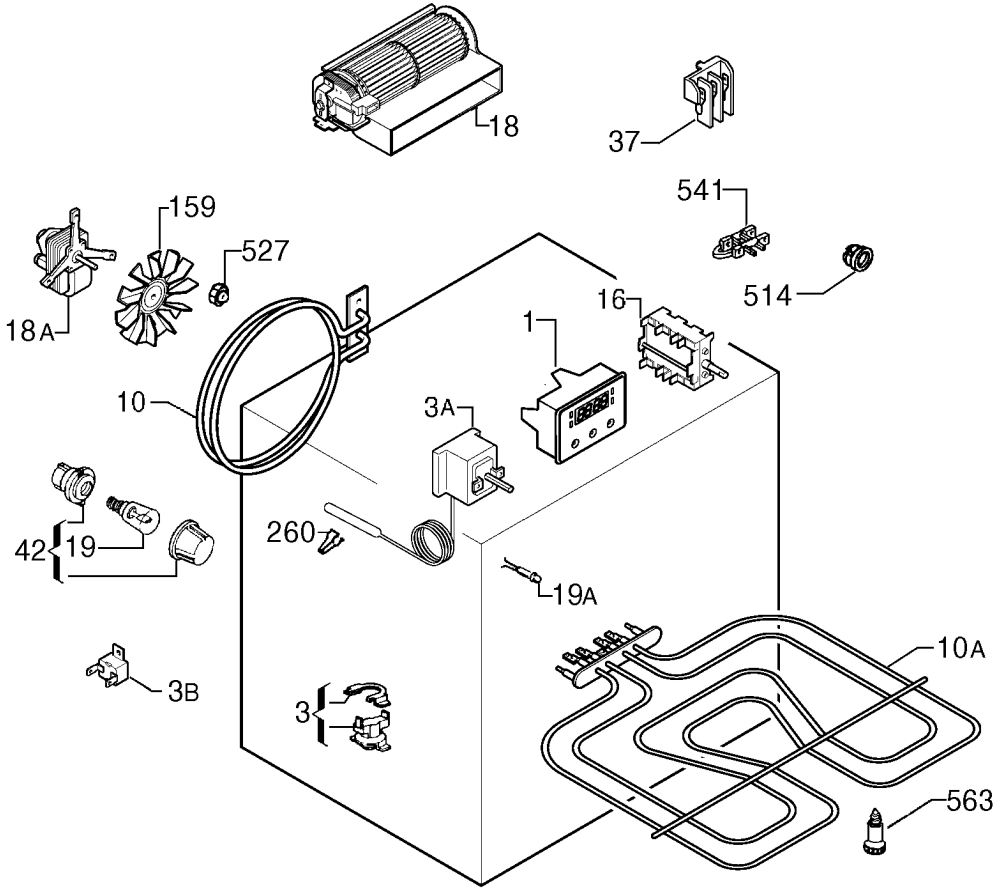

9493035737