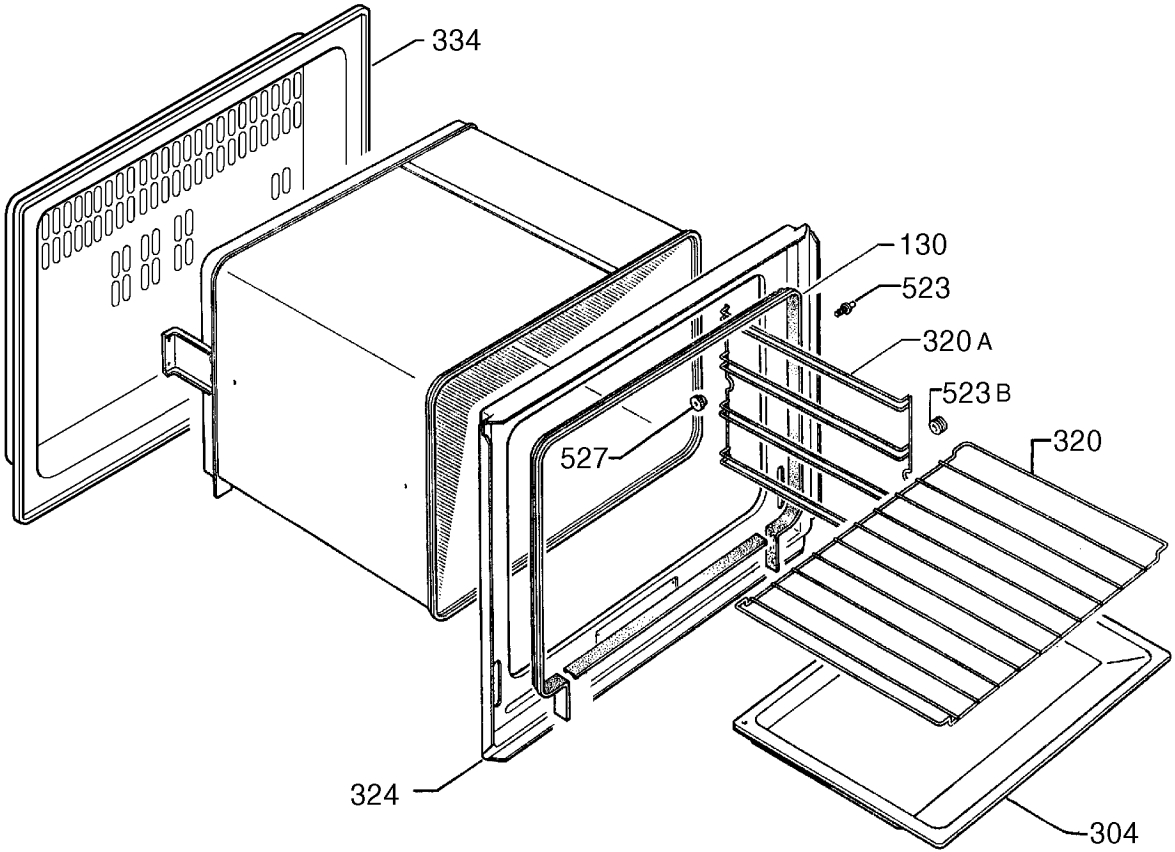

9493011060