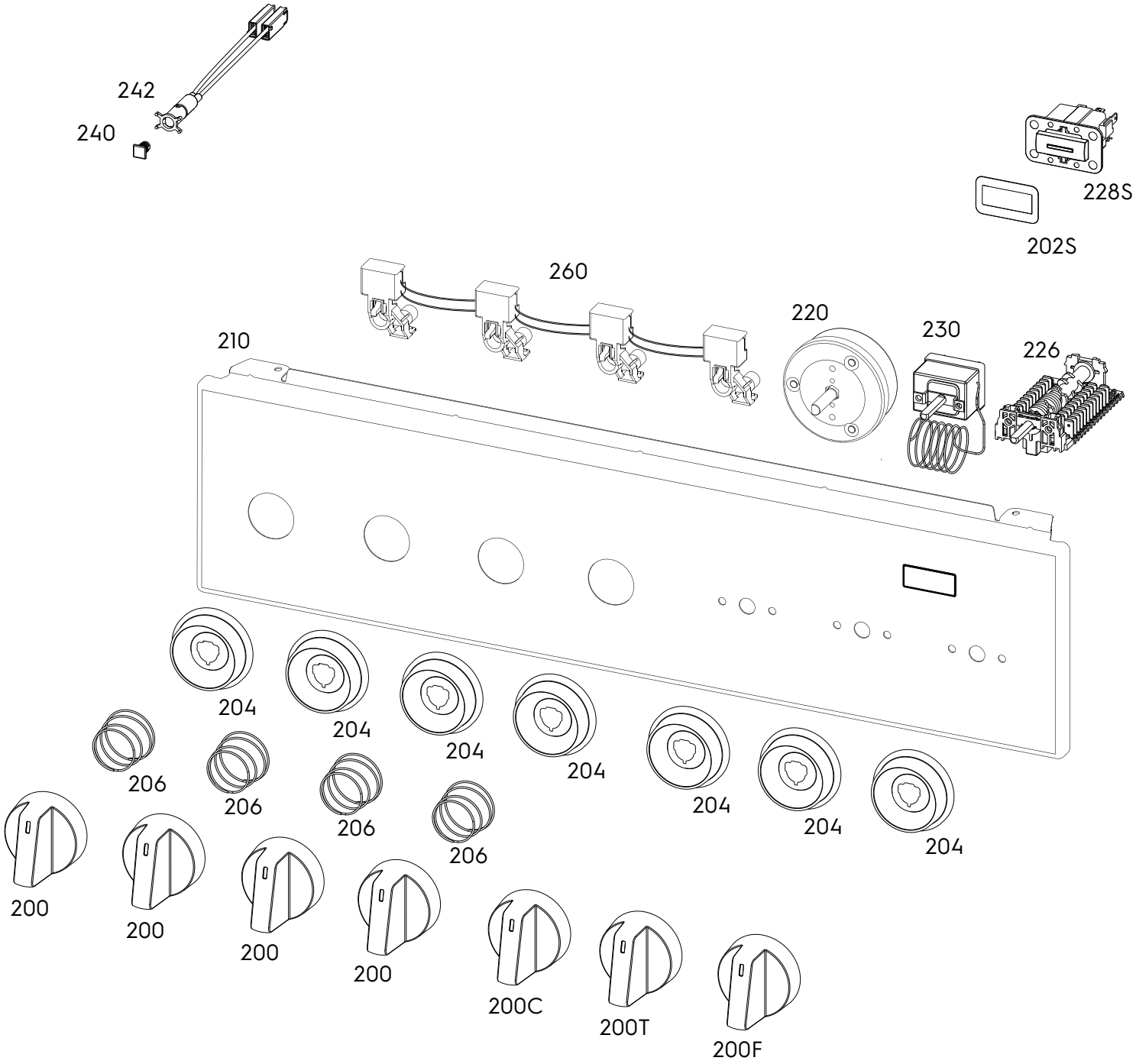

P09473076918