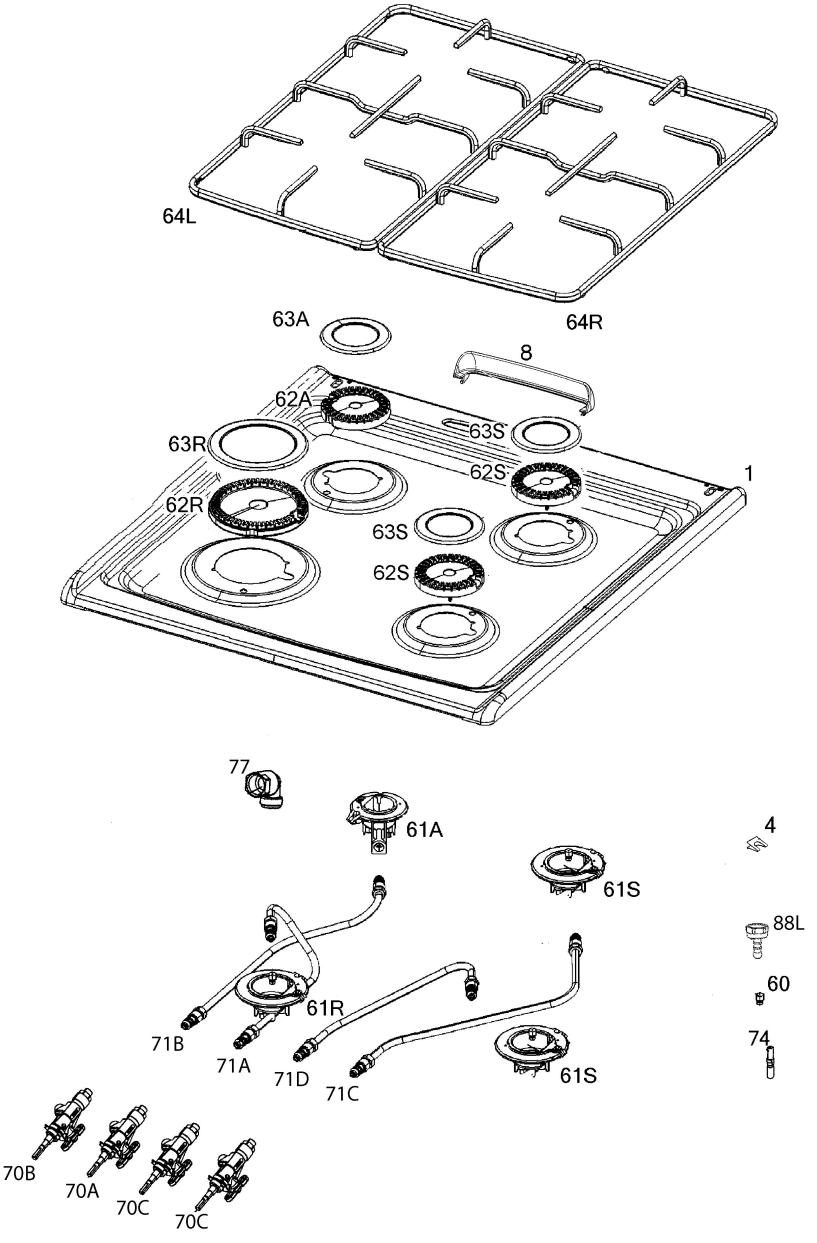

P09473069799