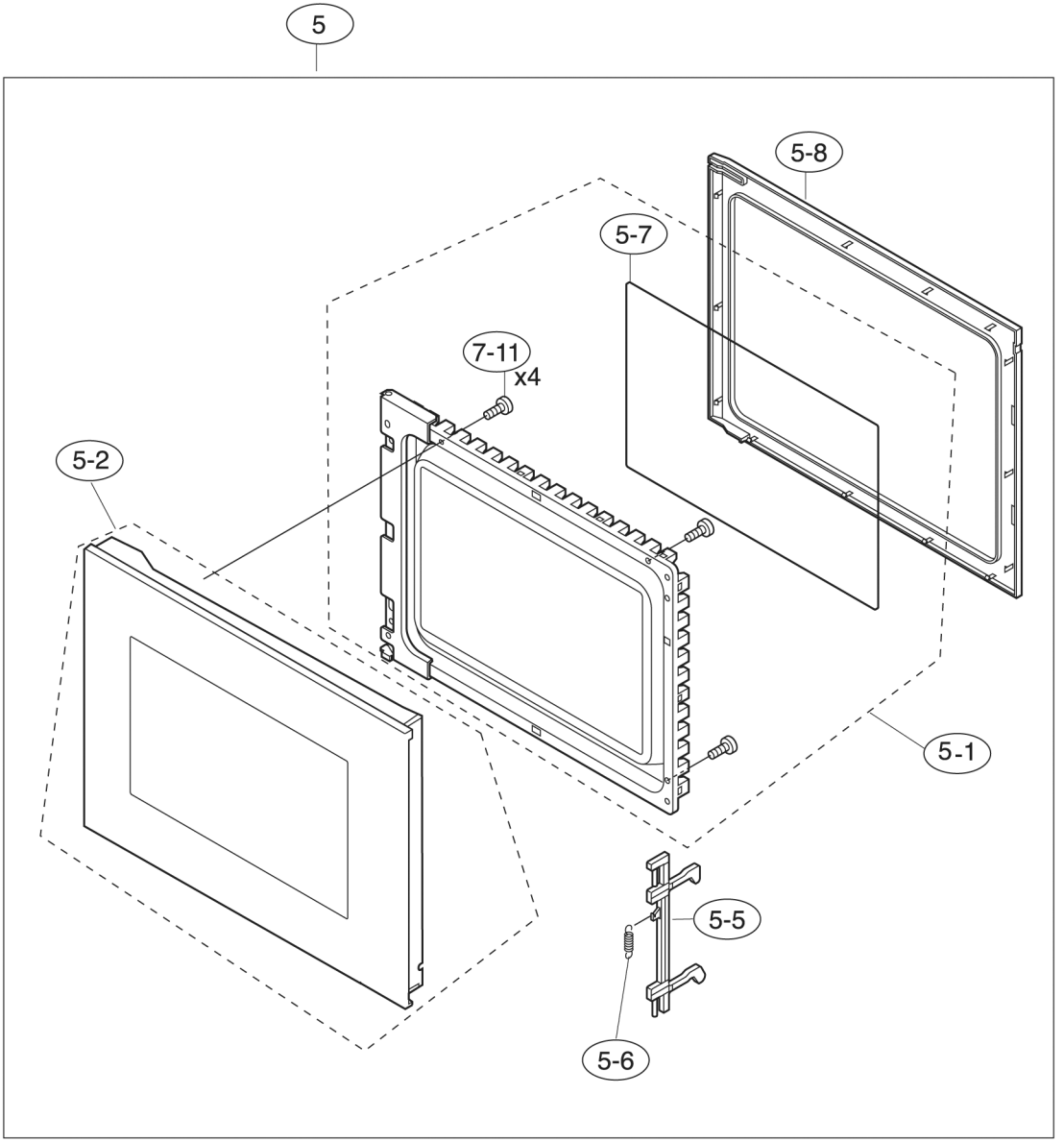

P09473064426