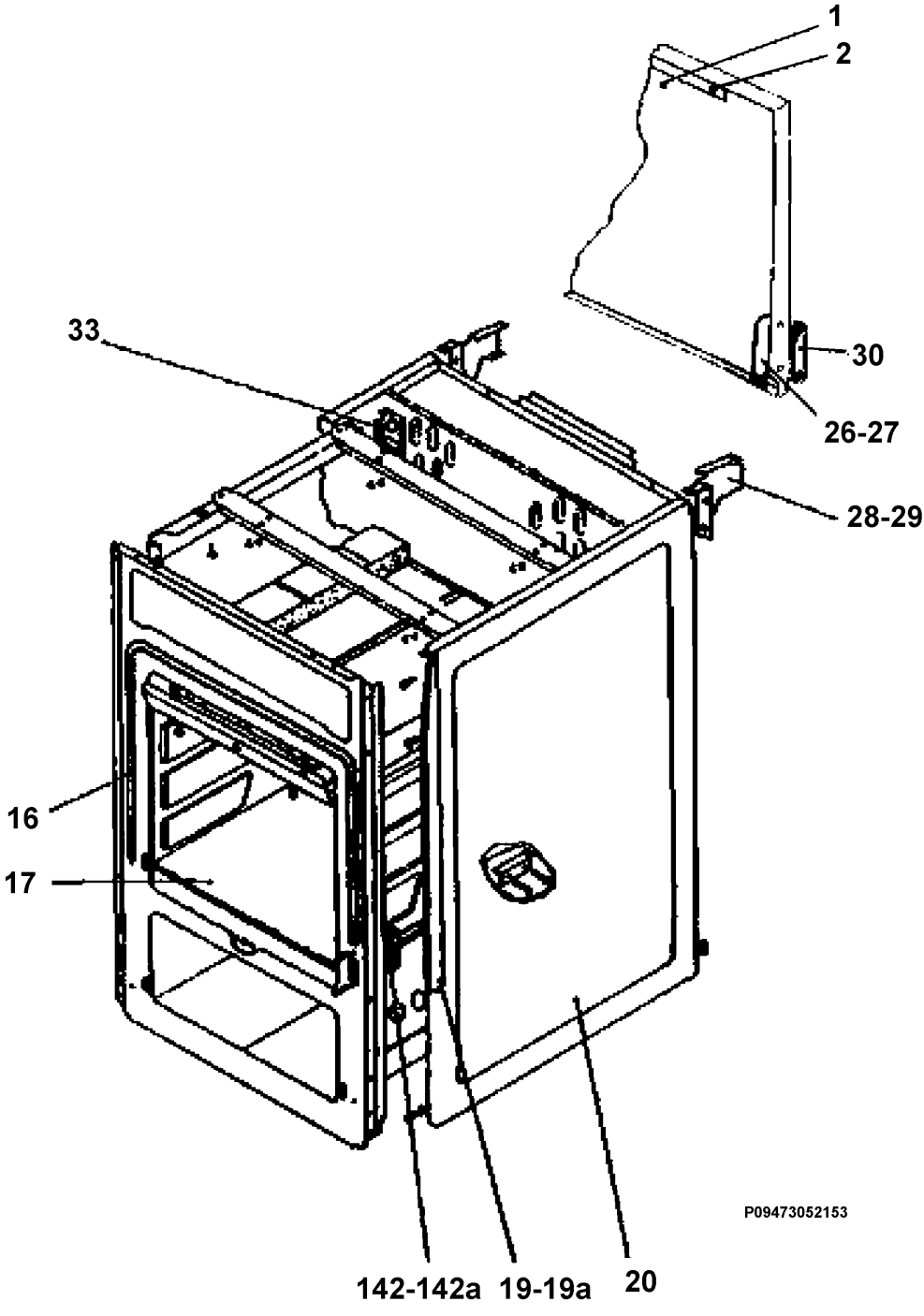
1
2
30
26-27
33
28-29
16
17
P09473052153
142-142a
19-19a
20