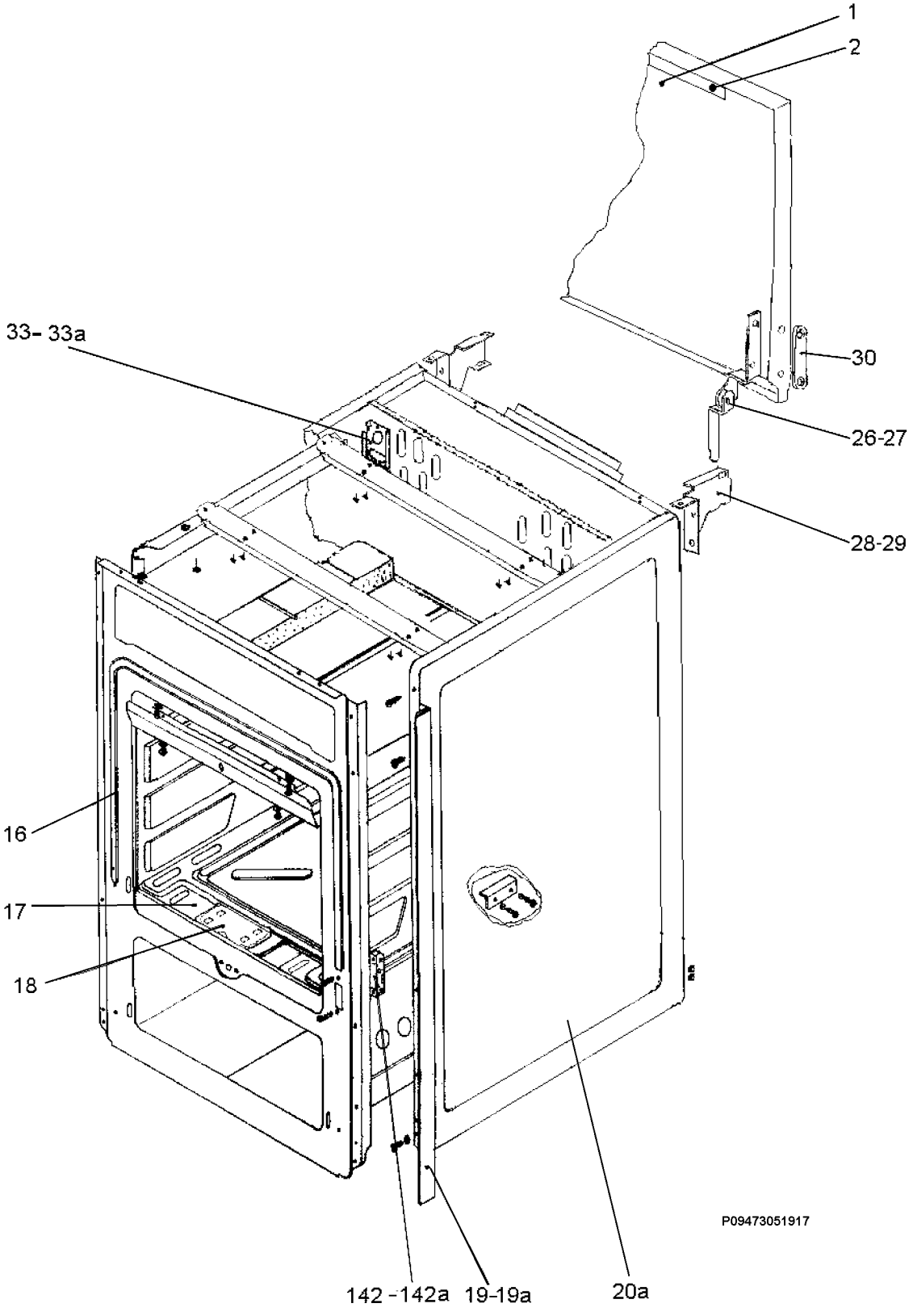
1
2
30
26-27
28-29
33- 33a
16
17
18
142 -142a
19-19a
20a
P09473051917