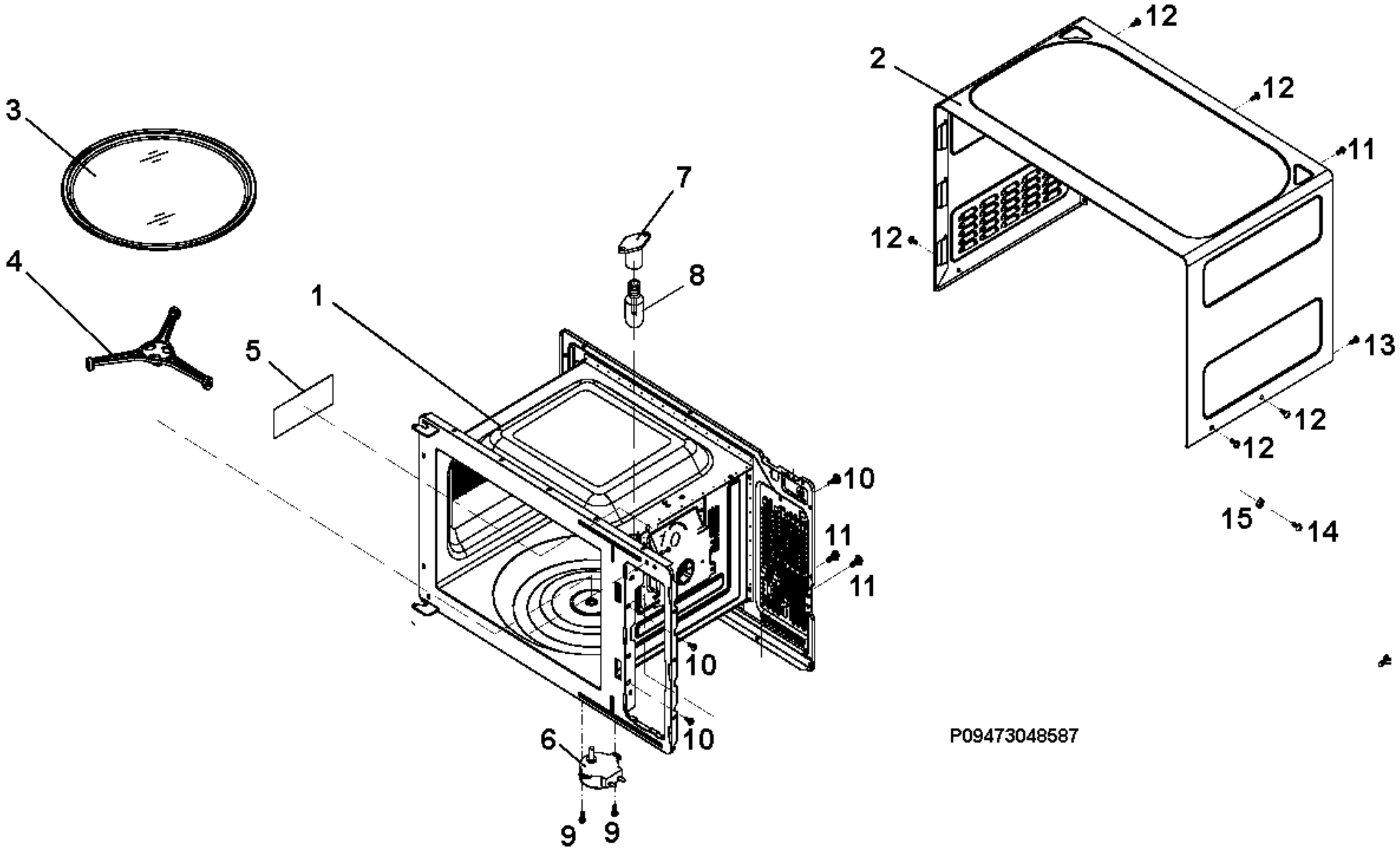
3
4
5
1
7
8
2
12
12
11
12
13
12
12
12
15
14
10
11
11
10
10
6
9
9
P09473048587