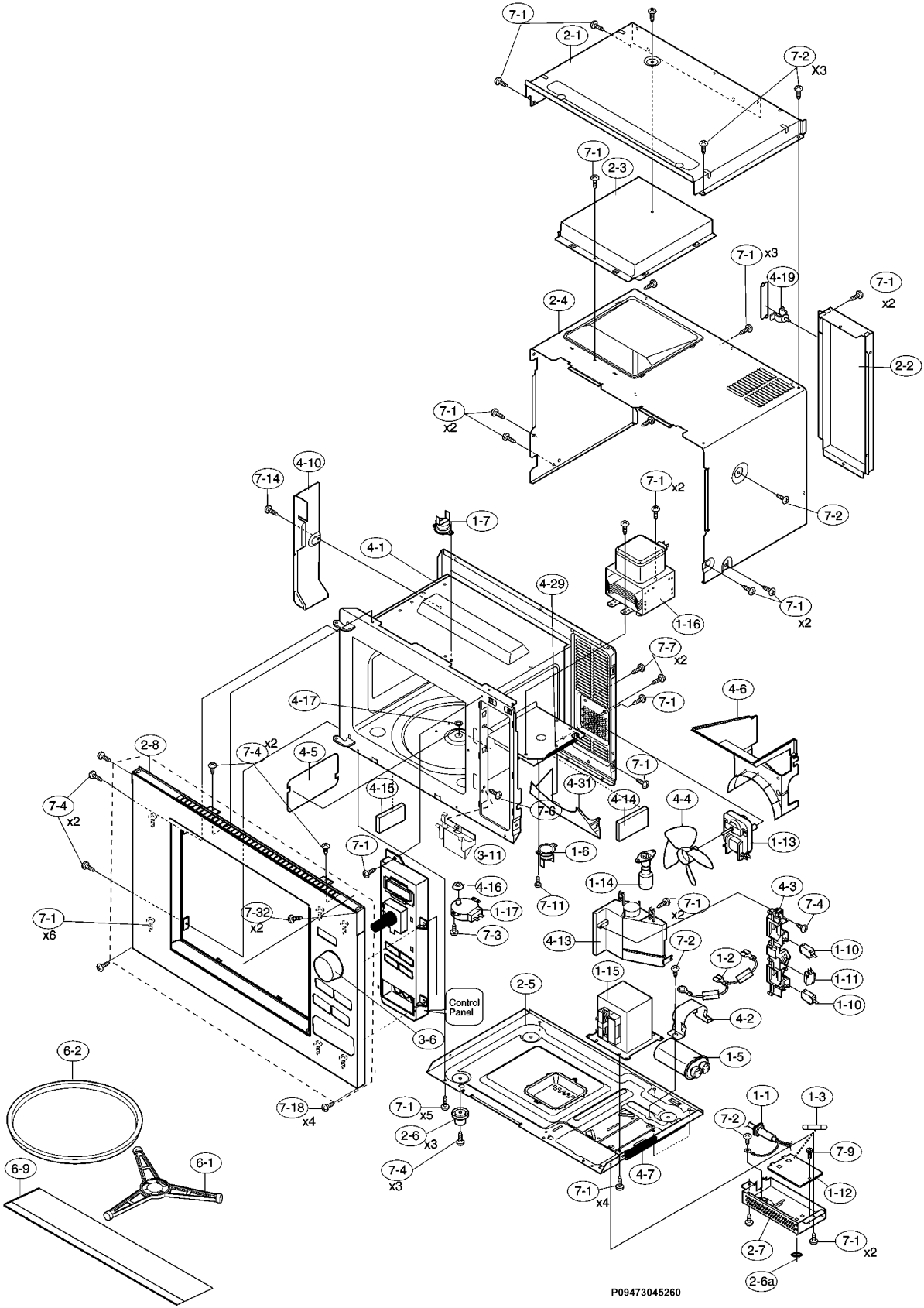
7-1
2-1
7-2
X3
7-1
2-3
7-1 x3
4-19
7-1
x2
2-4
2-2
7-1
x2
4-10
7-14
7-1 x2
7-2
1-7
4-1
4-29
1-16
7-1
x2
7-7
x2
7-1
4-6
4-17
2-8
7-4 x2
4-5
7-1
4-15
4-31
4-14
4-4
7-4
x2
7-6
1-13
7-1
3-11
1-6
1-14
4-16
7-11
4-3
7-1
x6
7-32
x2
1-17
7-1
x2
7-4
7-3
4-13
7-2
1-10
1-2
1-15
1-11
2-5
Control
Panel
4-2
1-10
3-6
1-5
6-2
1-1
1-3
7-18
x4
7-1
x5
7-2
2-6
x3
7-9
6-9
6-1
7-4
x3
4-7
7-1
x4
1-12
2-7
7-1
x2
2-6a
P09473045260