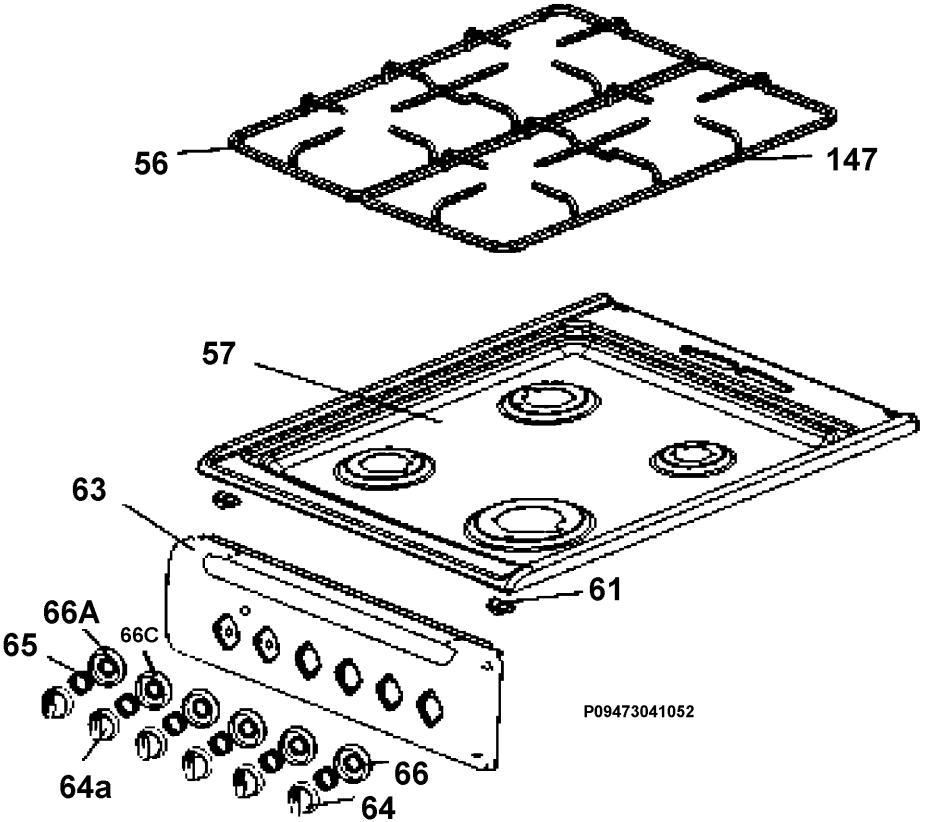
56
147
57
63
61
66A
66C
65
64a
66
64
P09473041052