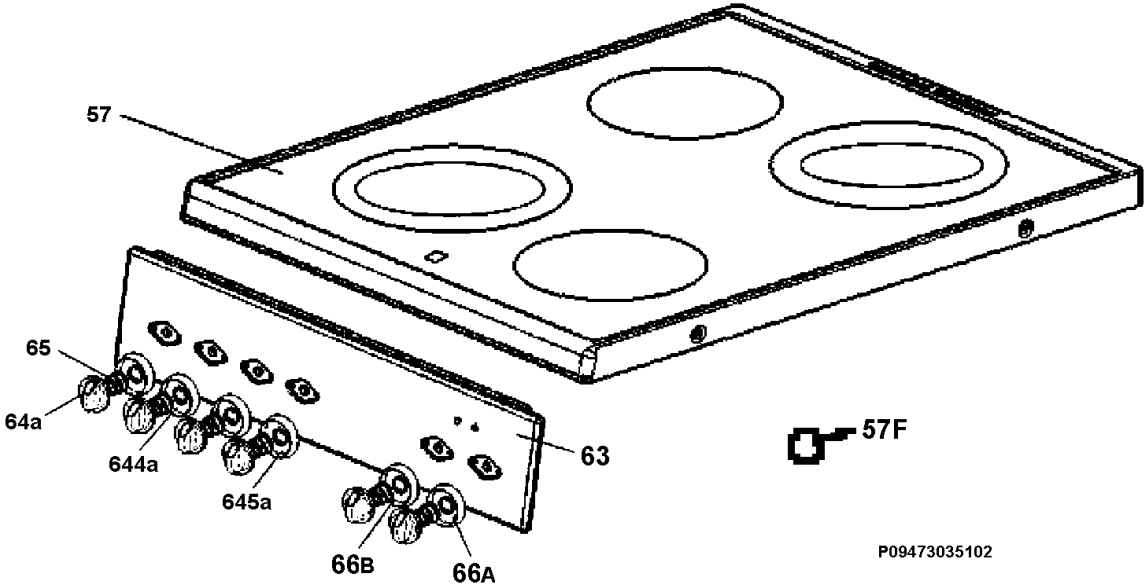
57
65
64a
644a
645a
66B
66A
63
57F
P09473035102