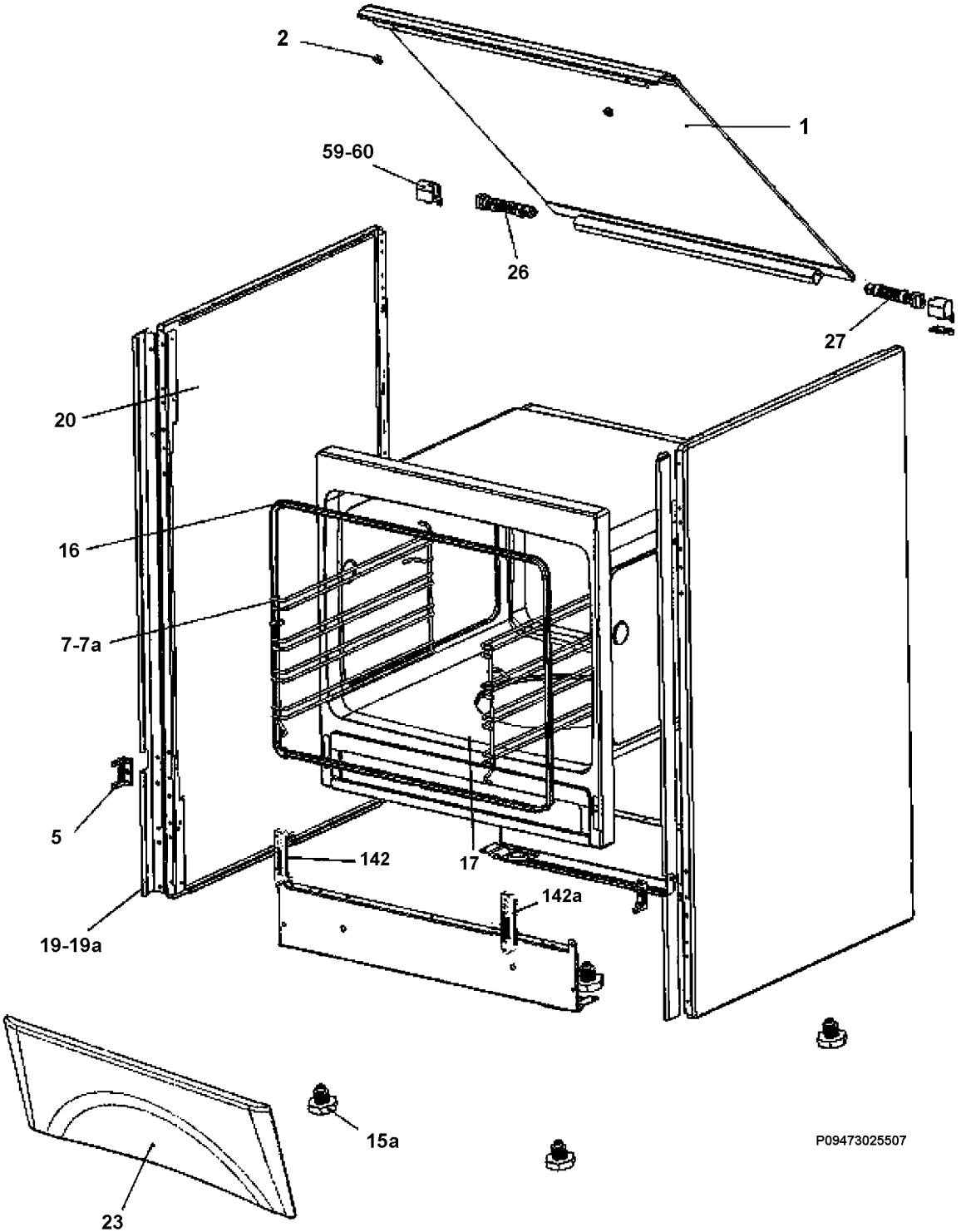
2
1
59-60
26
27
20
16
7-7a
5
142
17
142a
19-19a
15a
23
P09473025507