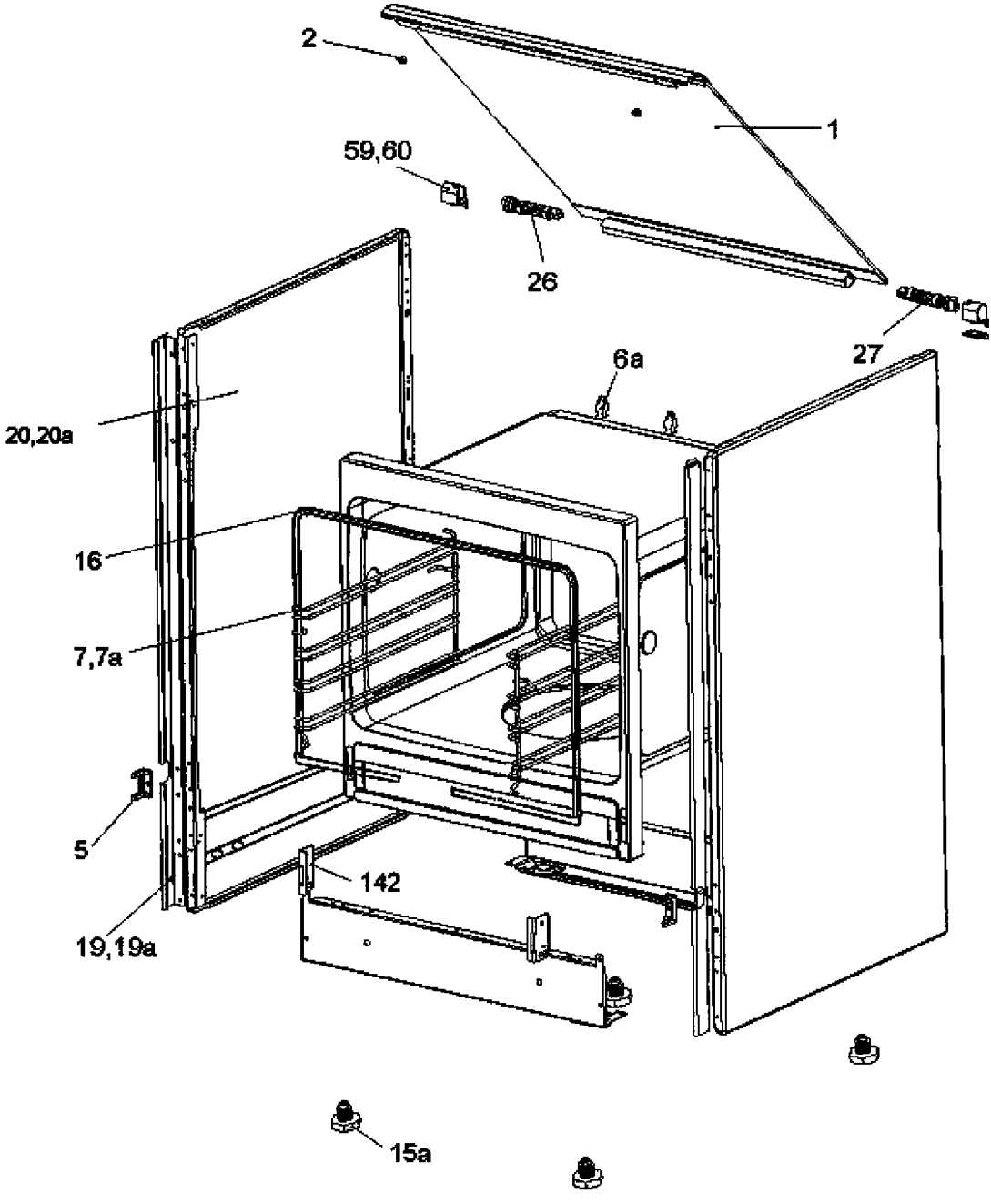

P09473022654