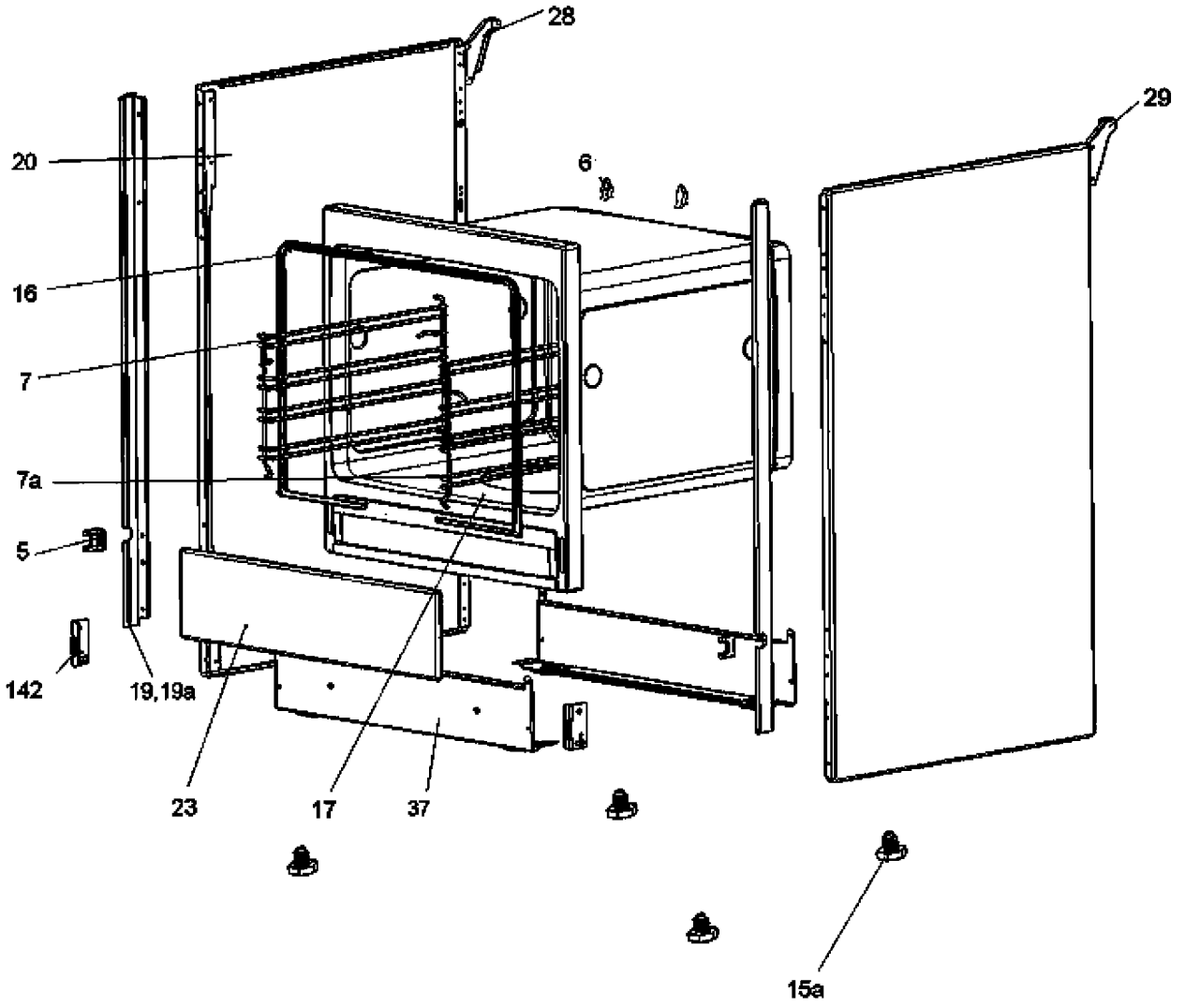

P09473022630