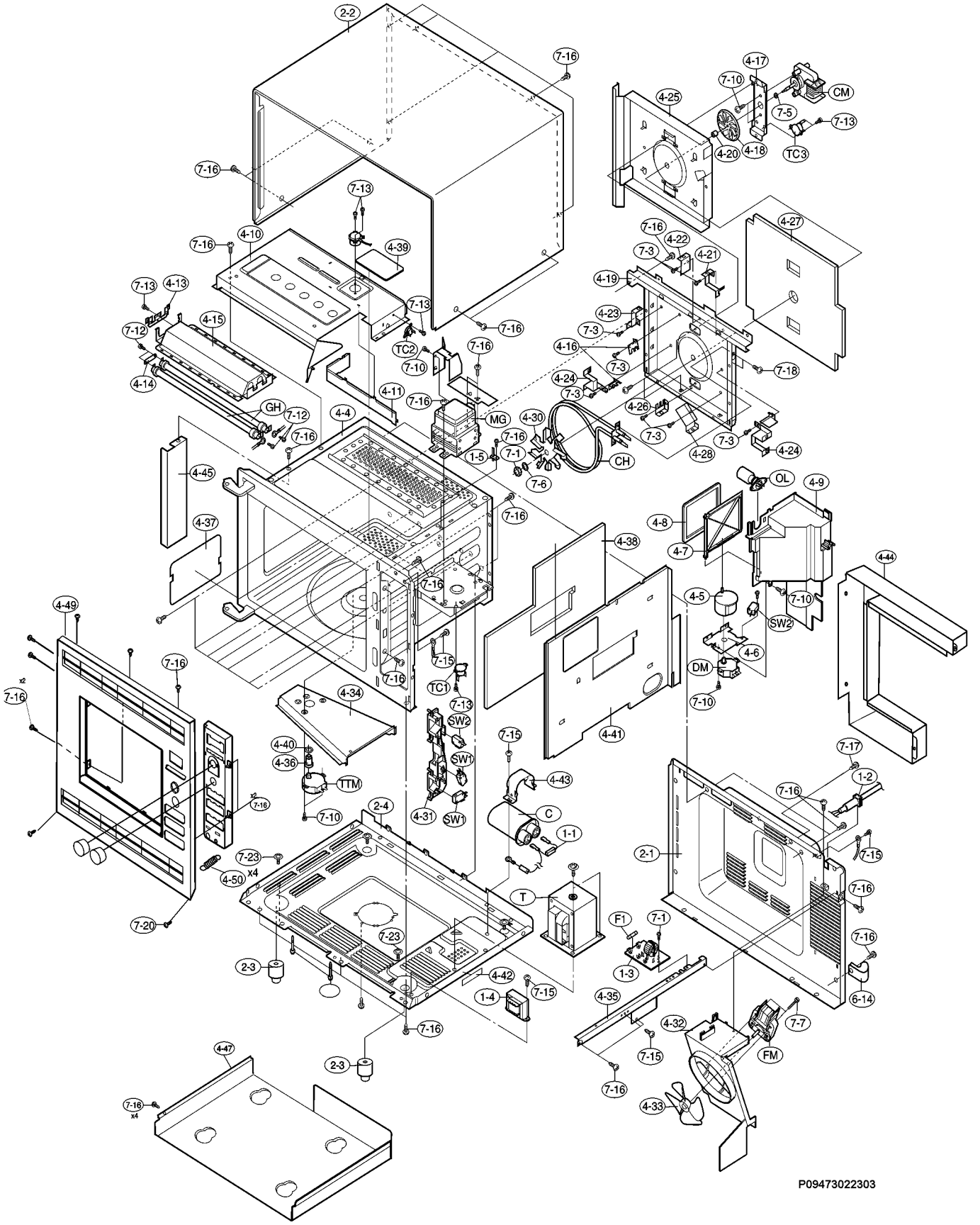
2-2
7-16
4-17
7-10
CM
4-25
7-5
7-13
4-20
4-18
TC3
7-13
4-10
4-39
4-27
7-16
4-22
7-3
4-21
4-19
7-13
4-13
4-15
7-12
4-14
TC2
7-10
4-23
4-16
4-24
4-11
GH
4-4
MG
4-30
4-26
4-28
4-24
4-45
1-5
7-1
CH
7-6
OL
4-9
4-8
4-7
4-37
4-38
4-44
4-5
SW2
4-6
DM
4-49
7-15
TC1
4-34
SW2
4-40
4-36
SW1
TTM
4-41
4-43
4-31
C
1-1
2-4
7-17
1-2
2-1
7-23
4-50
x4
T
F1
1-3
7-20
2-3
4-42
1-4
4-35
4-32
7-7
FM
6-14
4-47
4-33
P09473022303