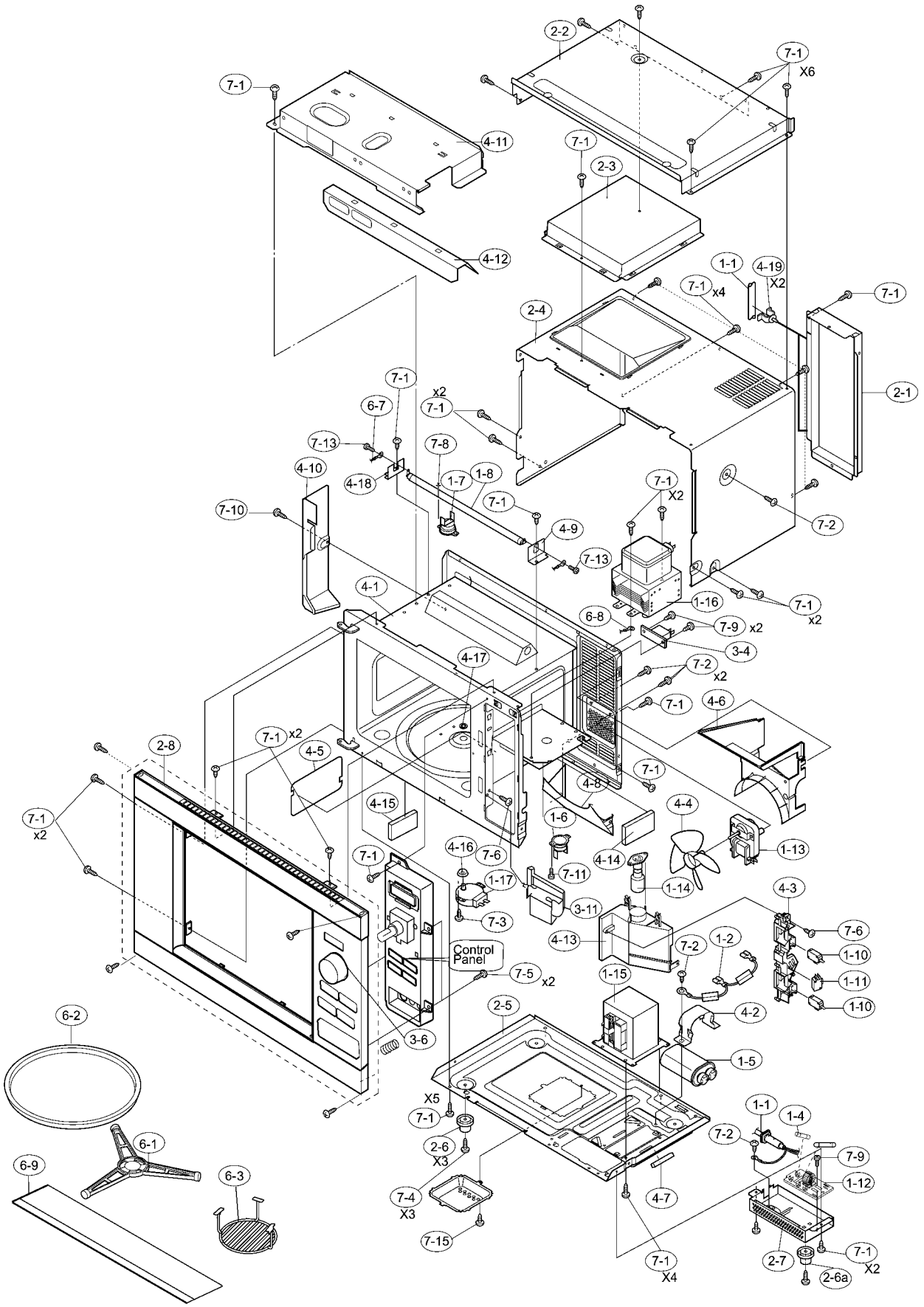


NOTE: In the event of removing the turntable motor cover this part should be refitted using screw connection:
**50280576005** (7-1)

P09473022064