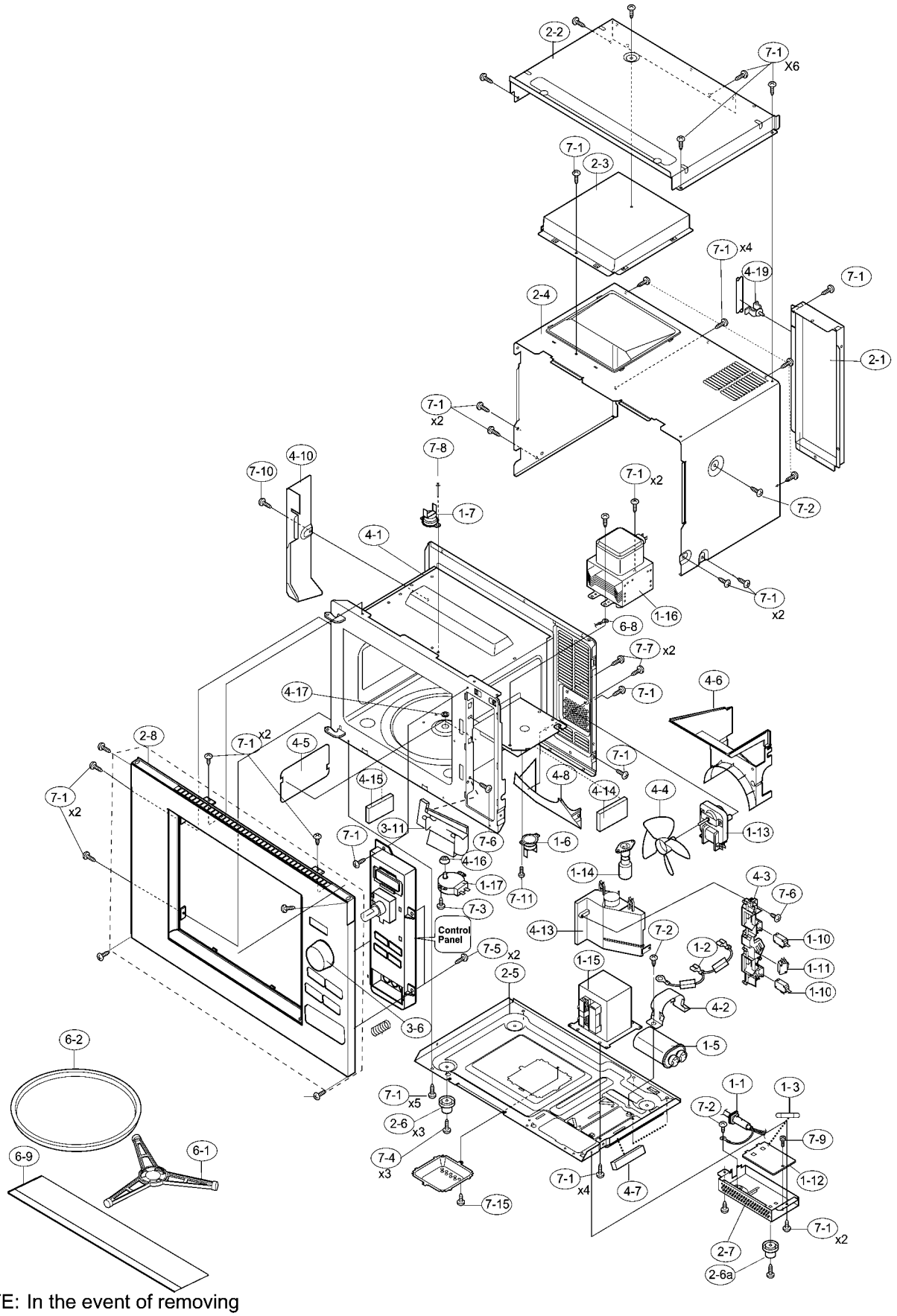

NOTE: In the event of removing the turntable motor cover this part should be refitted using screw connection:
50280576005 (7-1)

P09473022010