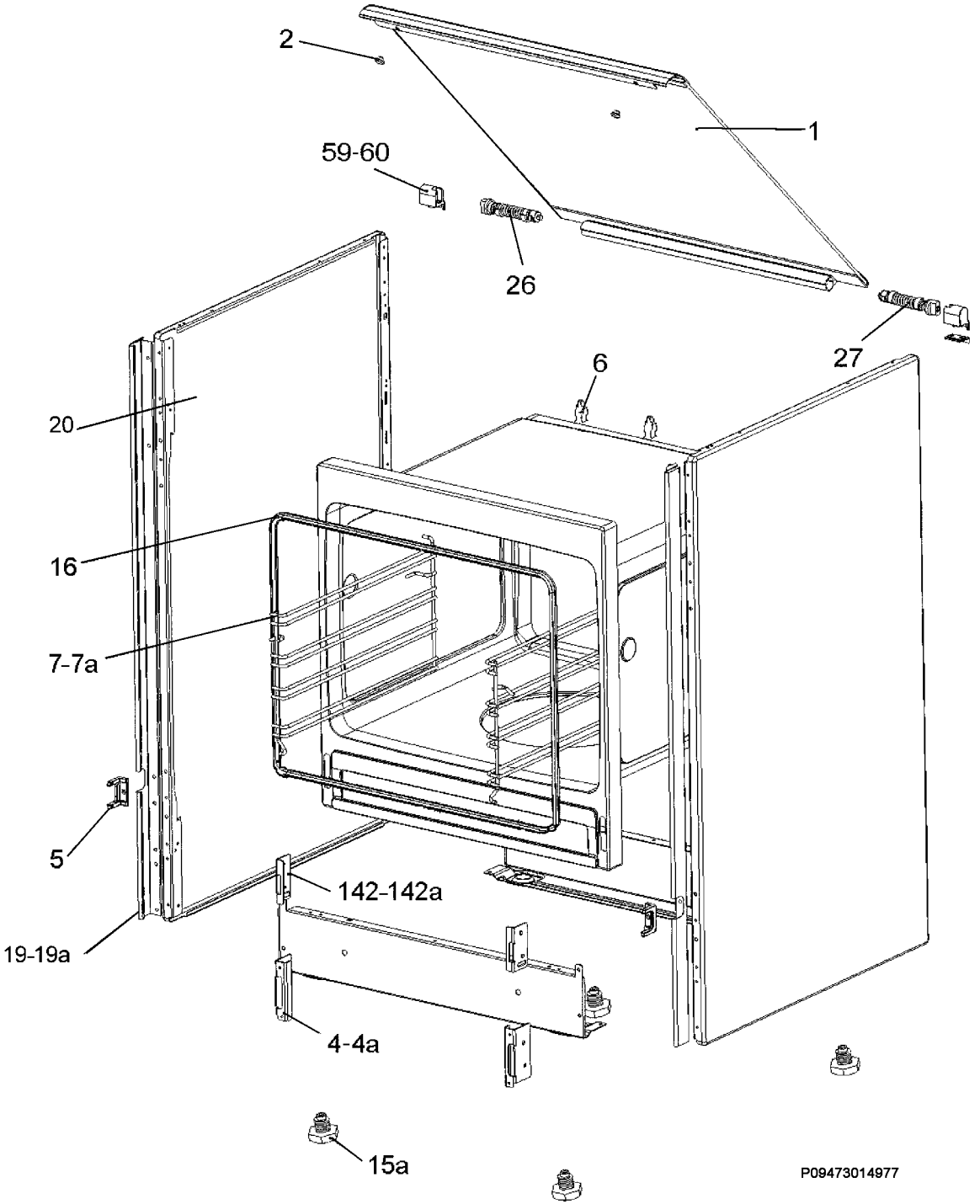
2
1
59-60
26
27
6
20
16
7-7a
5
142-142a
19-19a
4-4a
15a
P09473014977