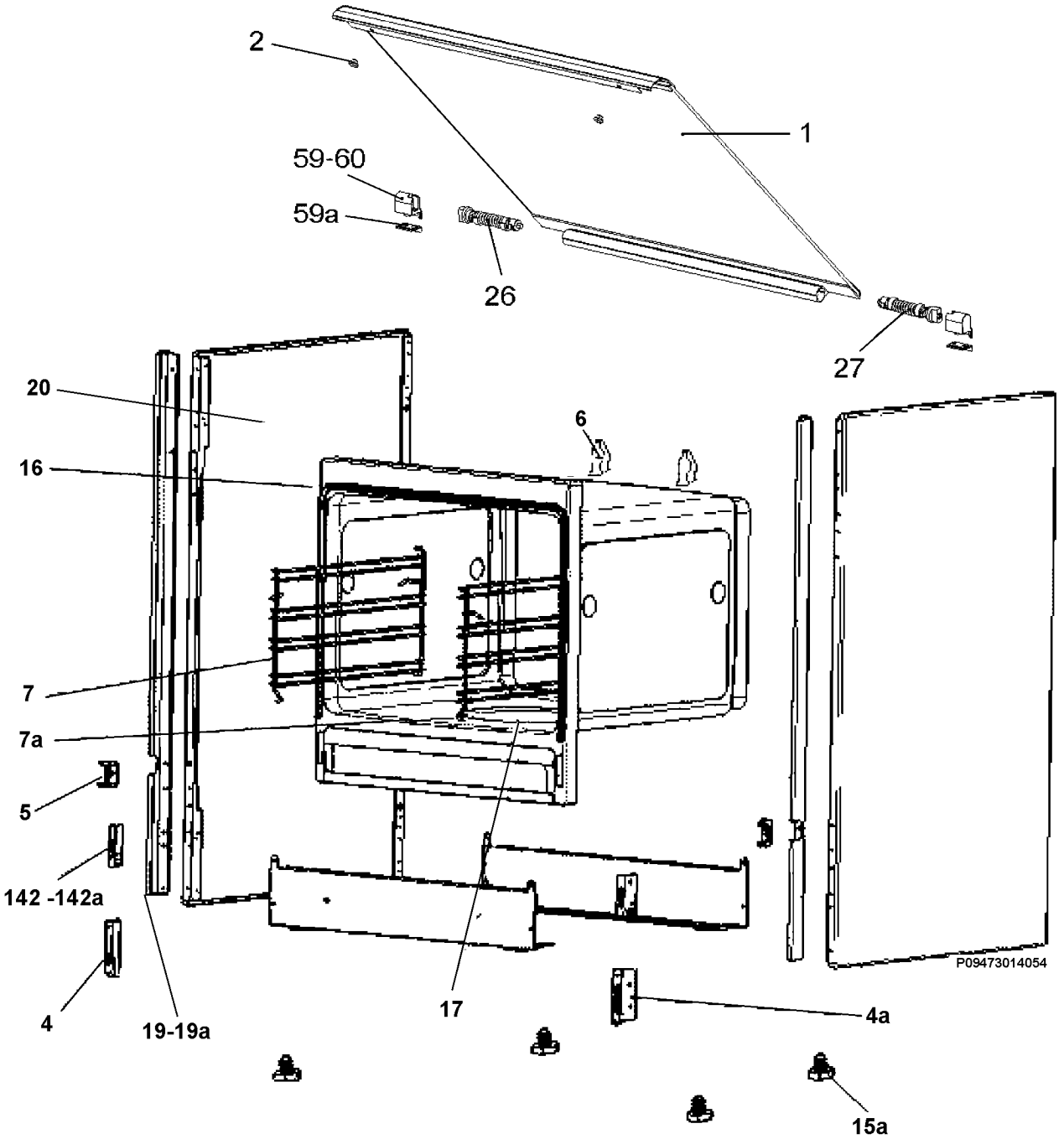
2
1
59-60
59a
26
27
20
6
16
7
7a
5
142 -142a
4
19-19a
17
4a
15a
P09473014054