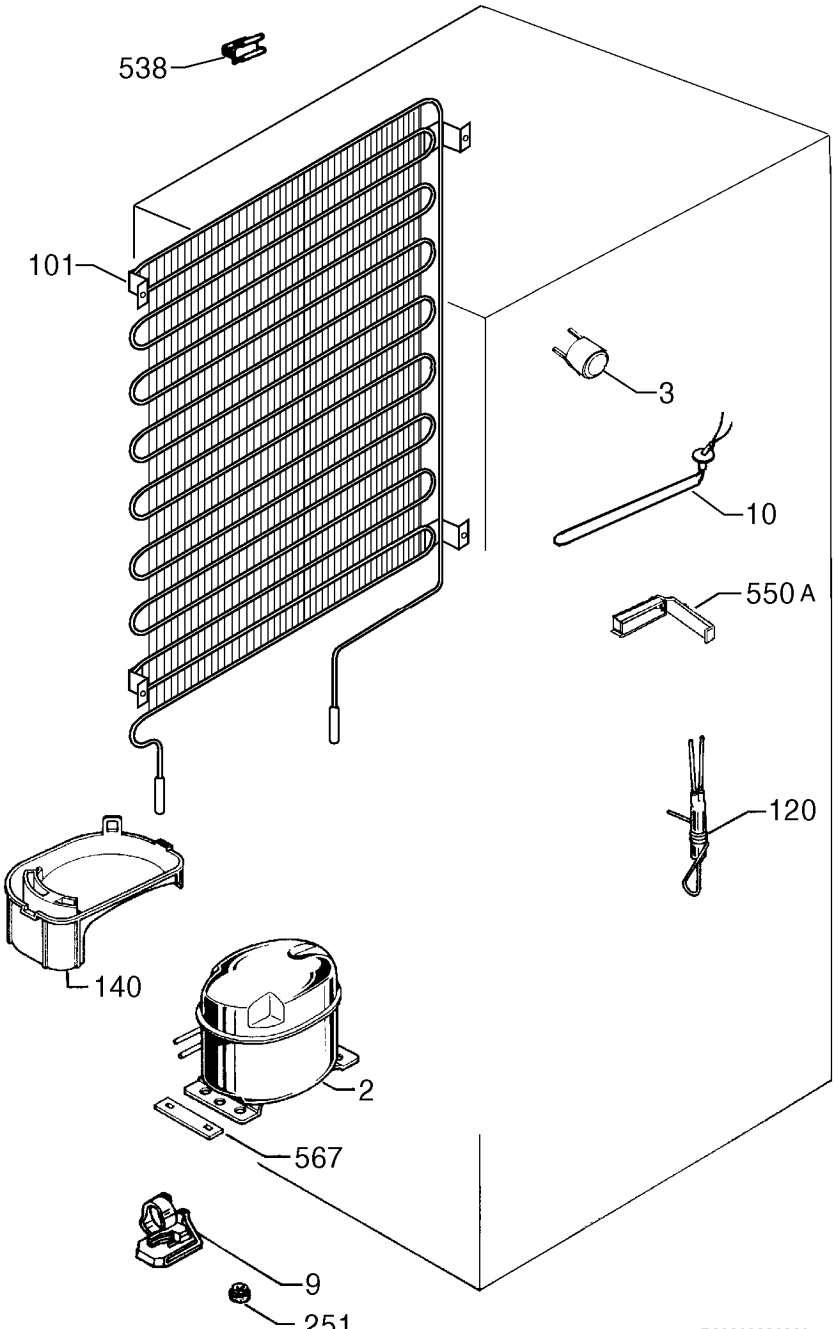
538
101
3
10
550 A
120
140
2
567
9
251
P09283006068