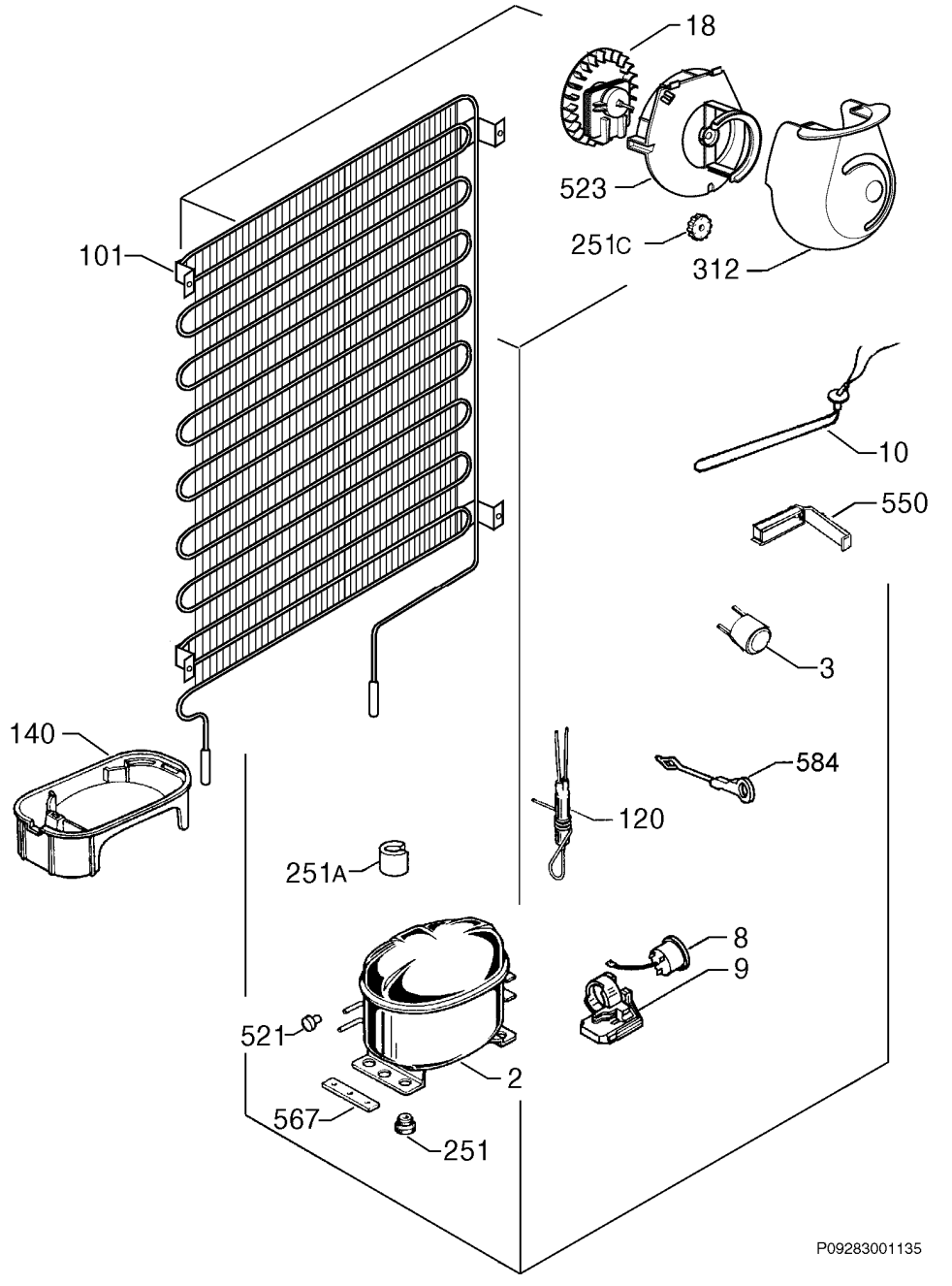

P09283001135