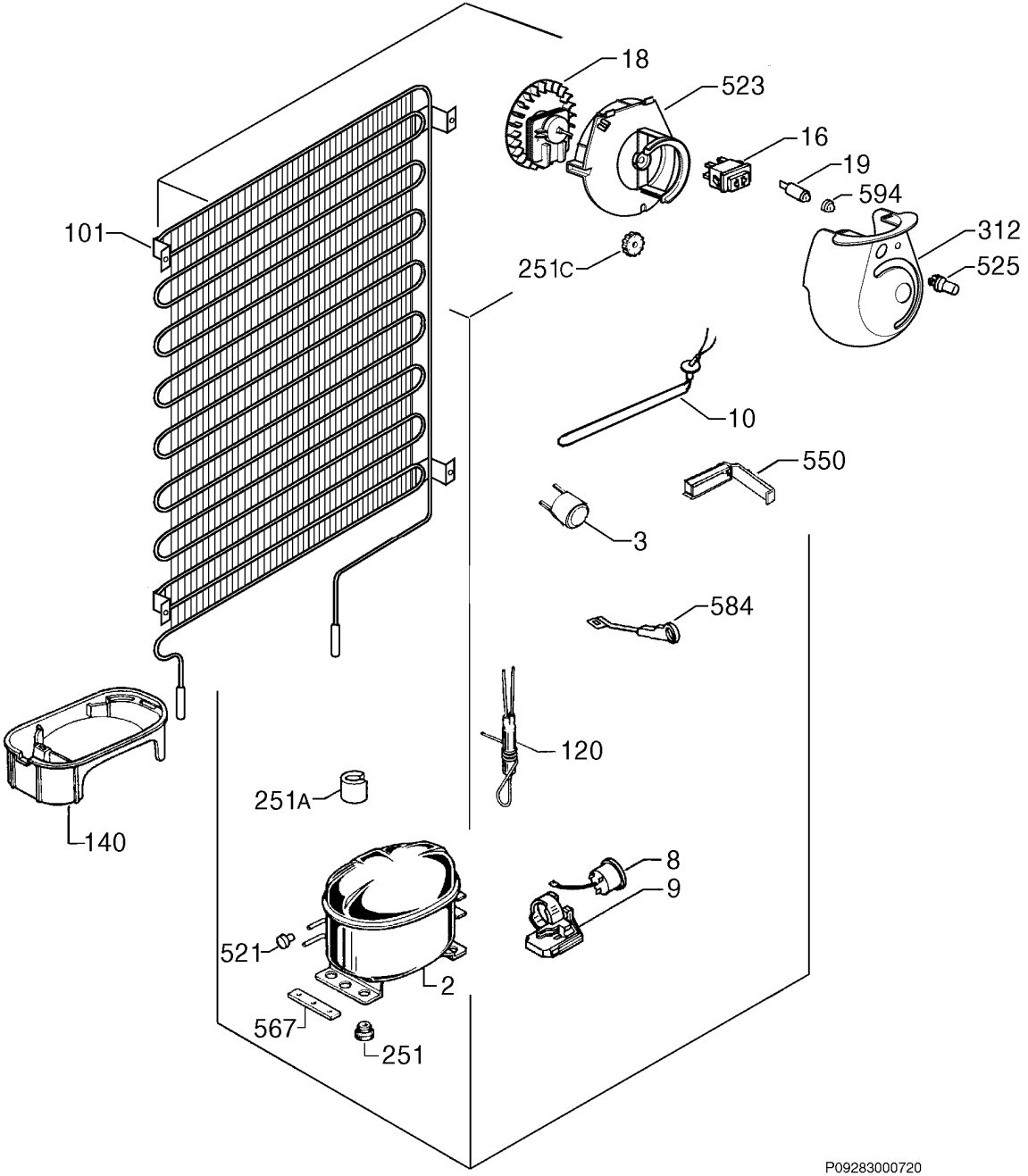

P09283000720