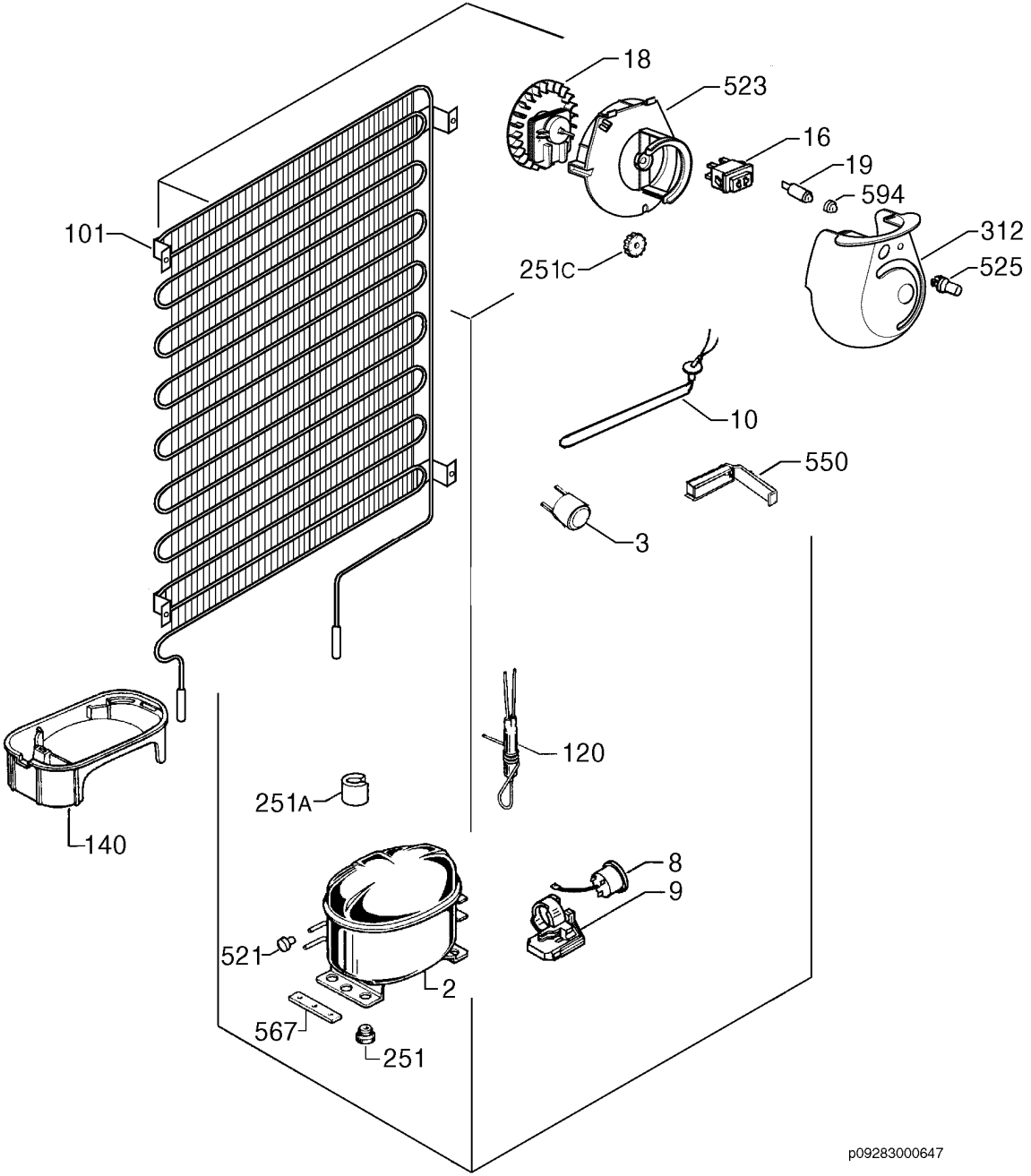

p09283000647