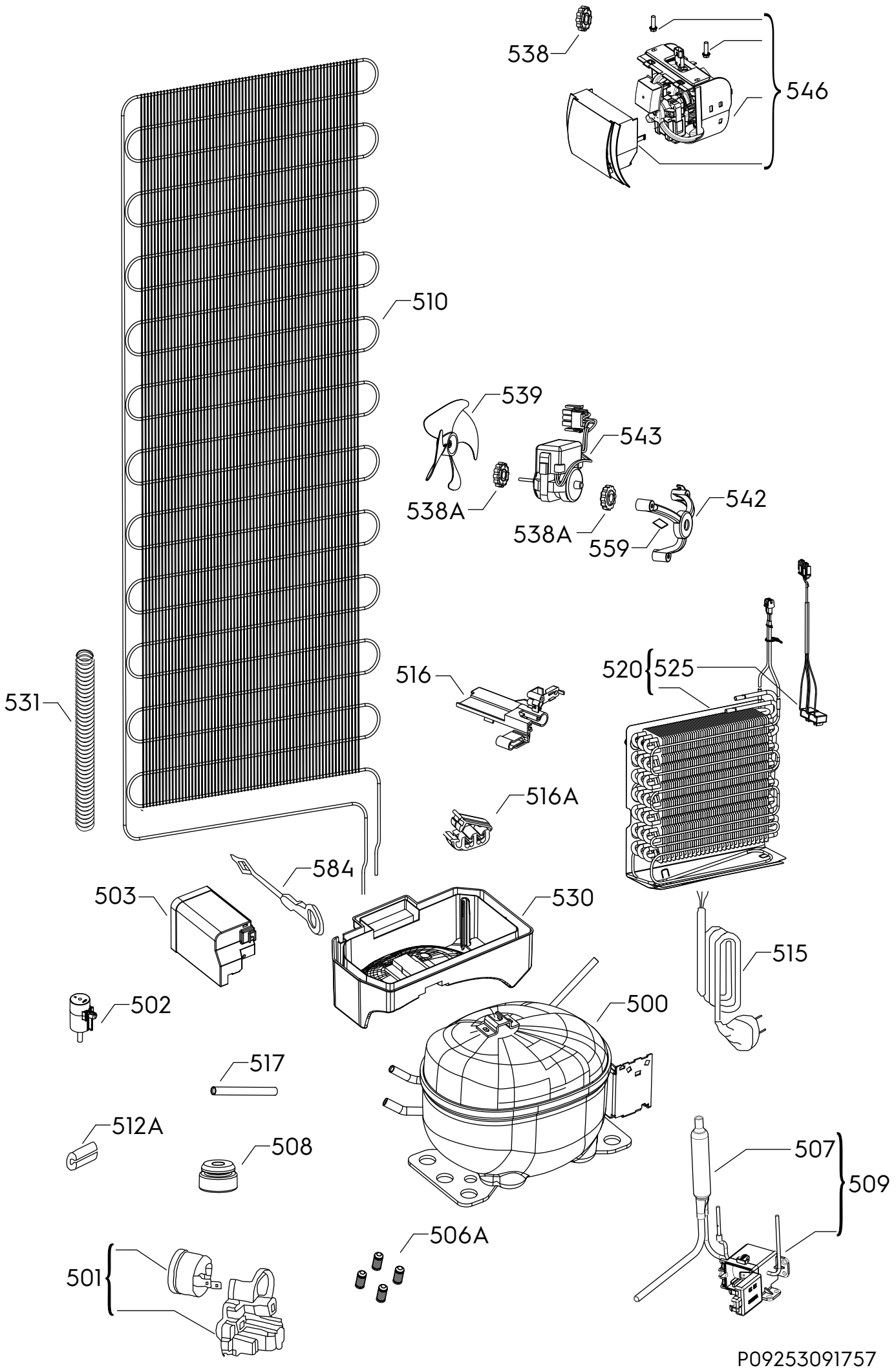

P09253091757