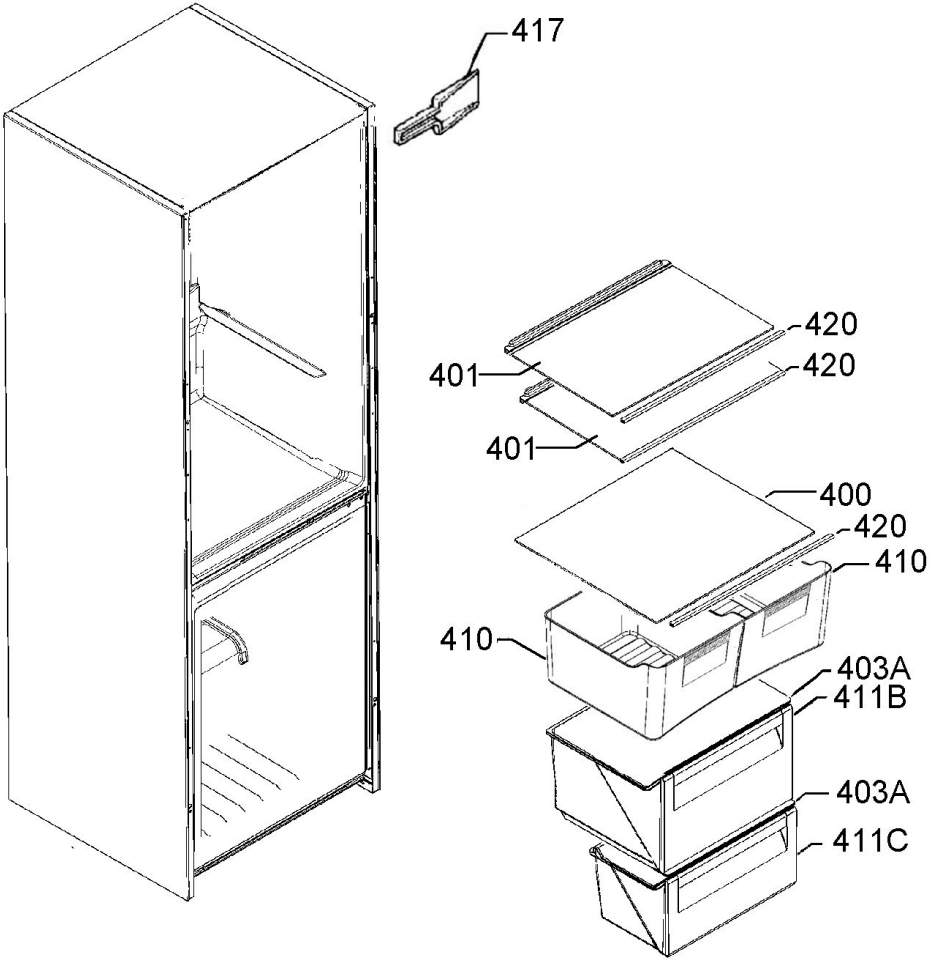

P09253088113