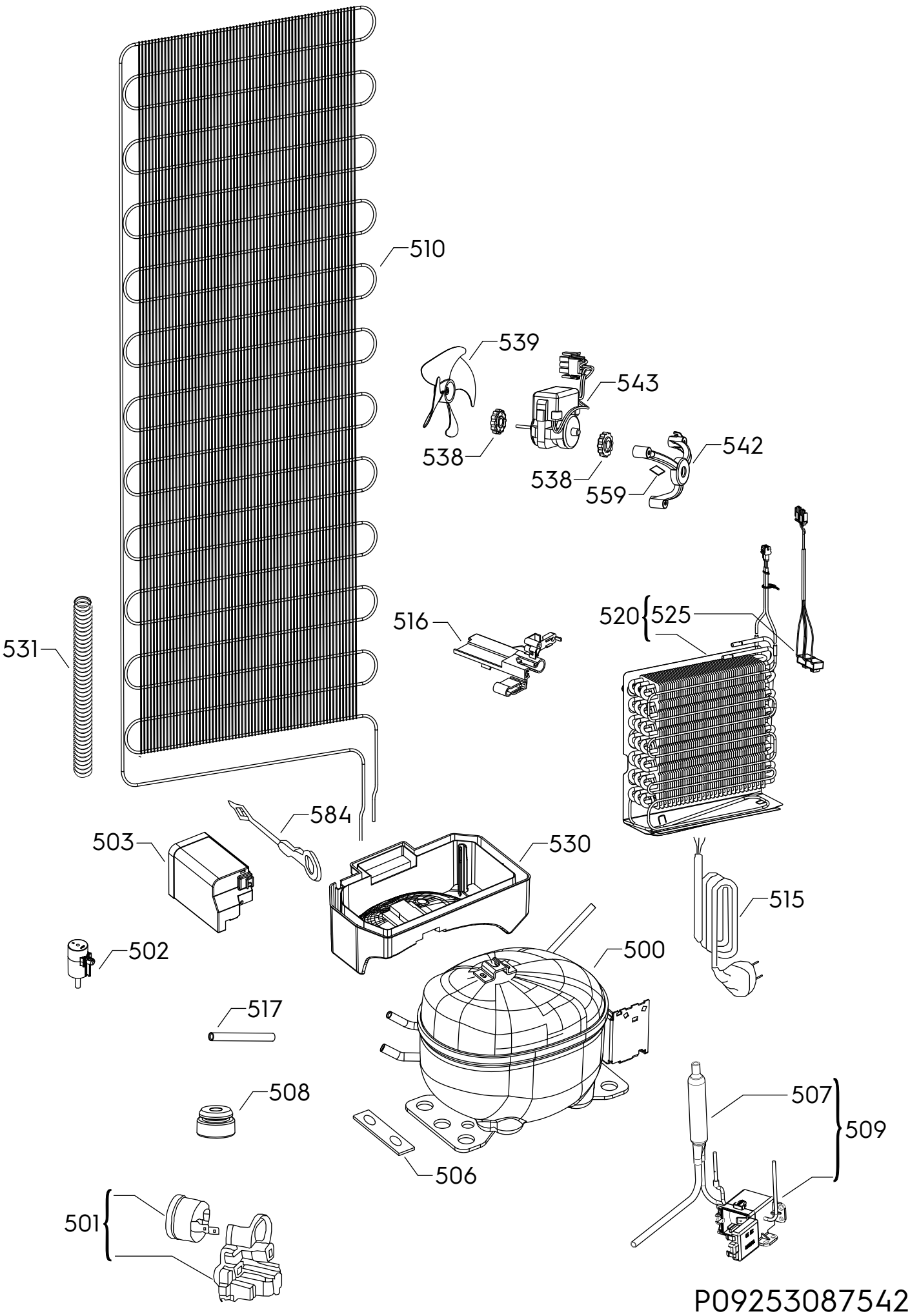

P09253087542