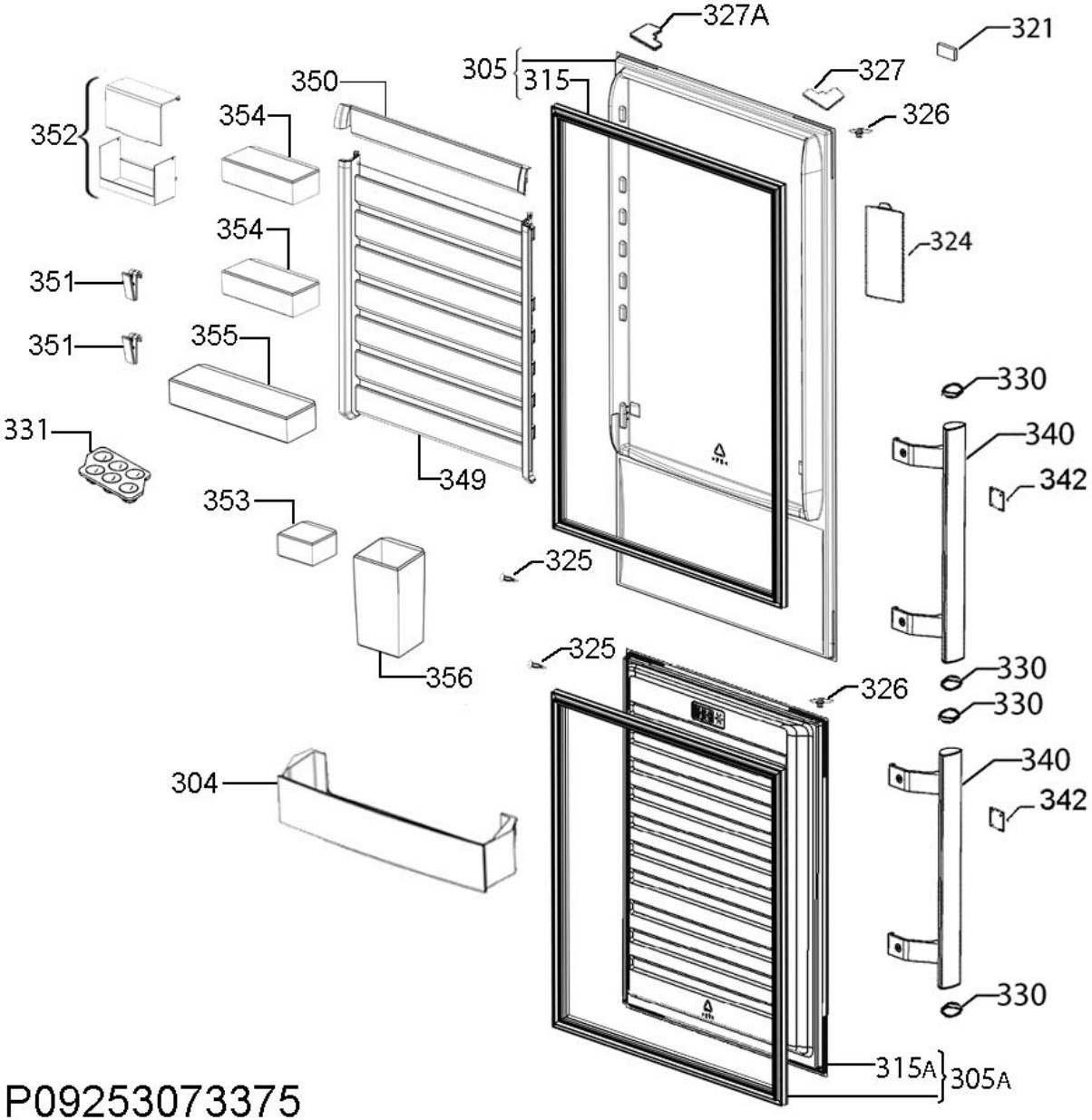

P09253073375