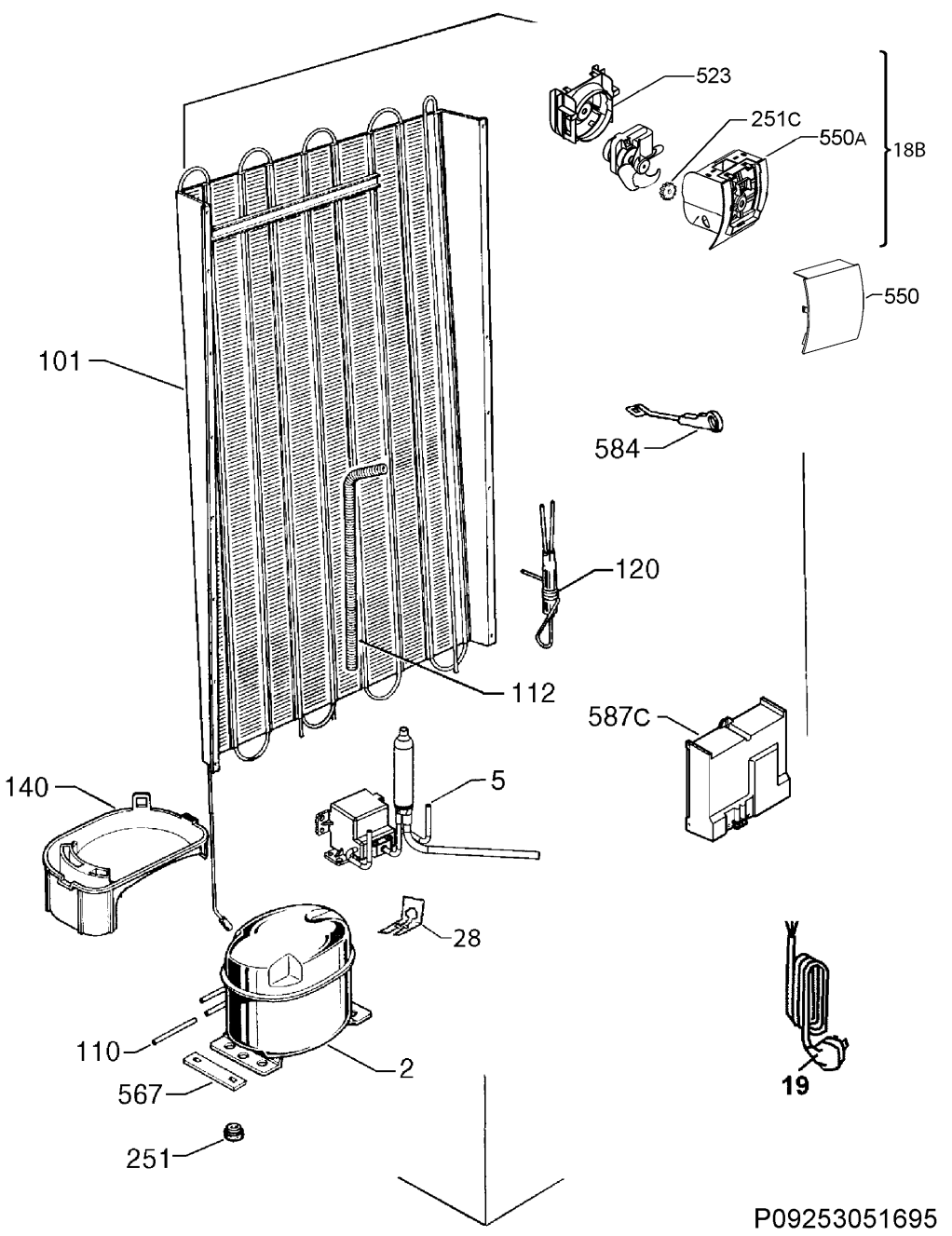

P09253051695