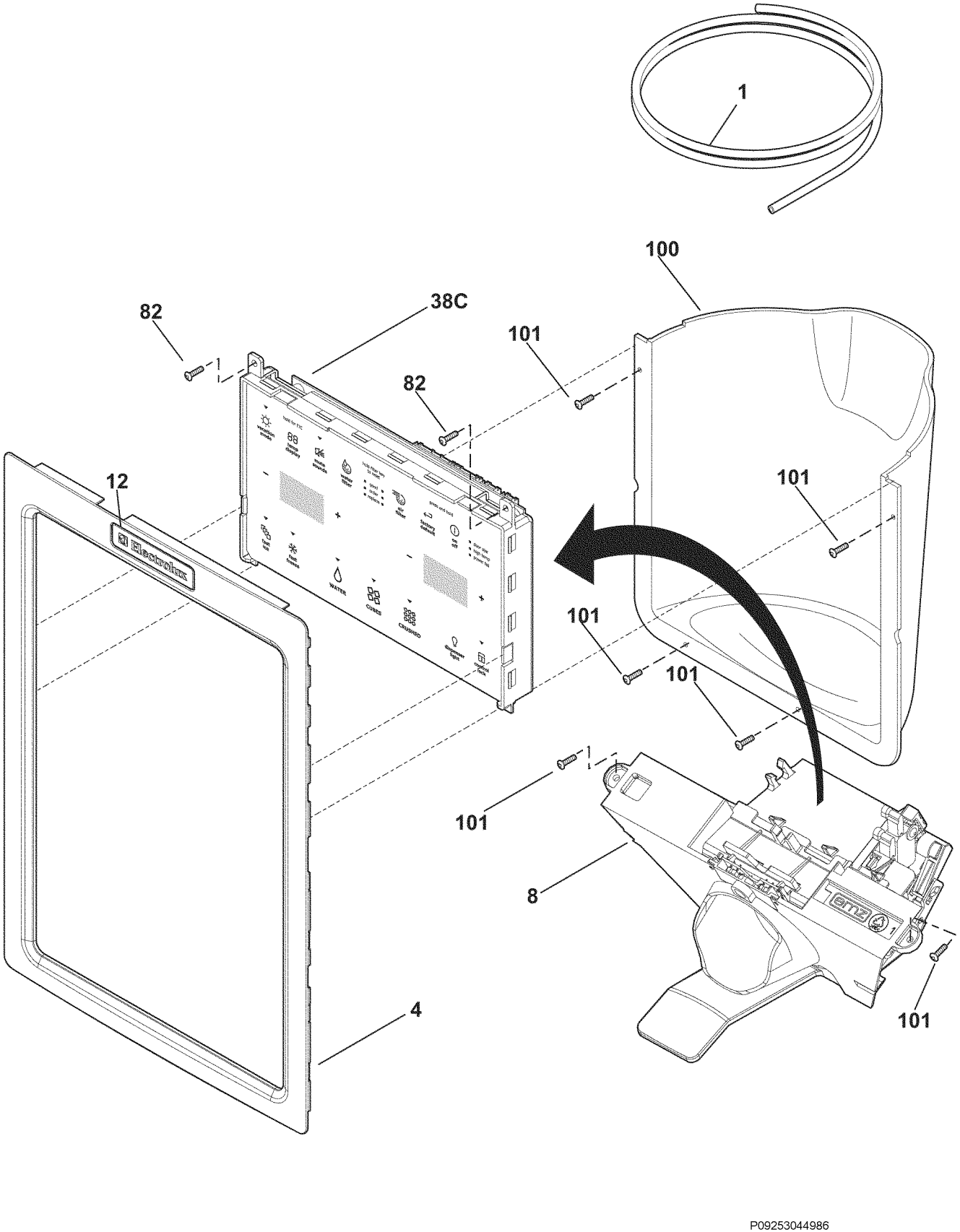

P09253044986