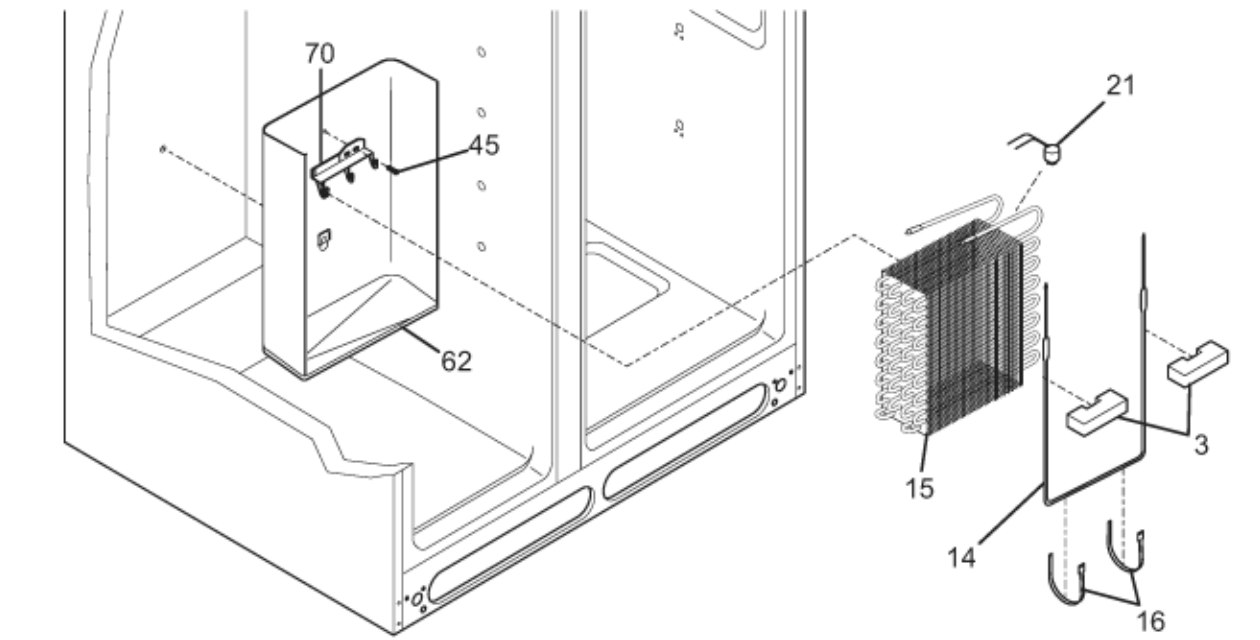

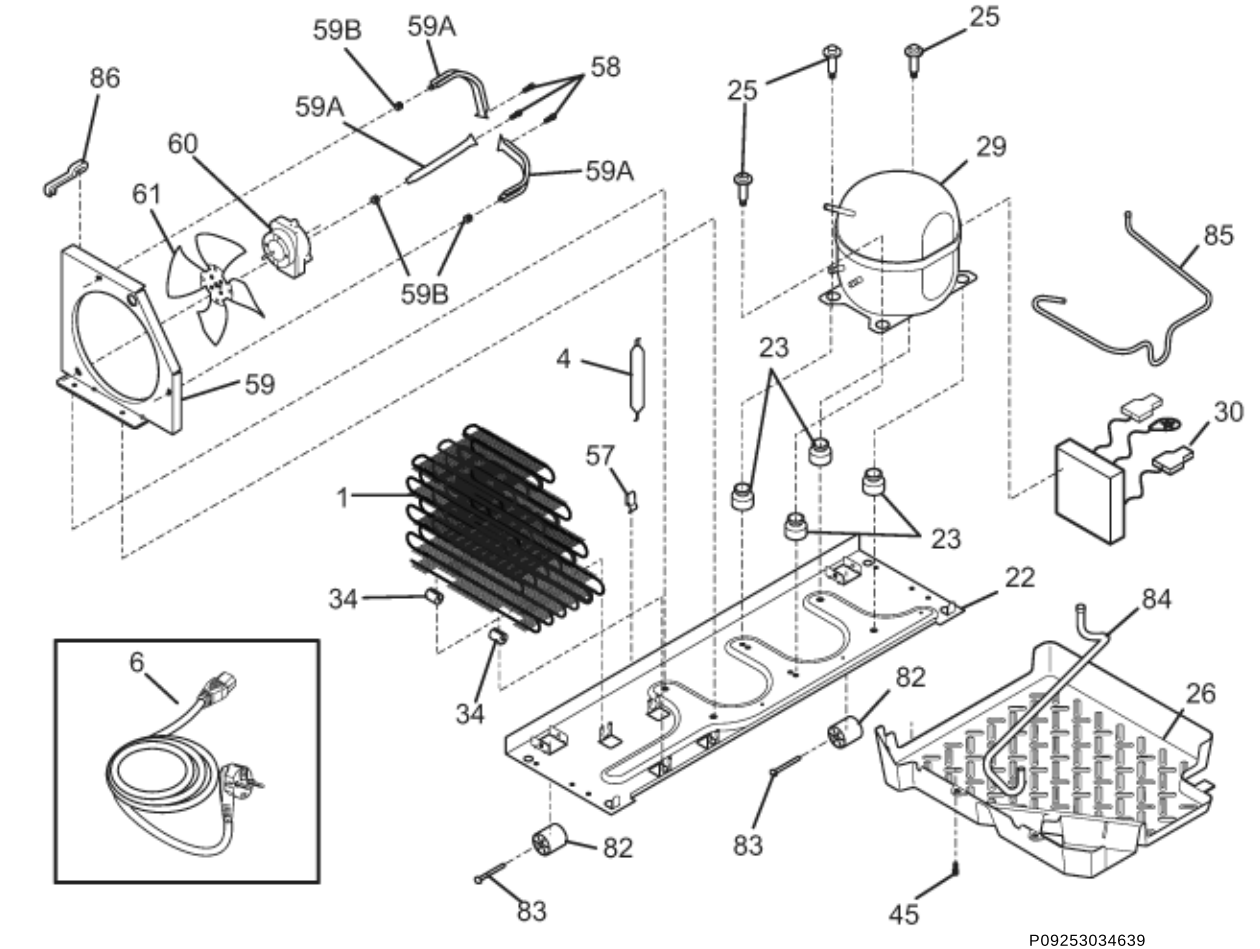

P09253034639