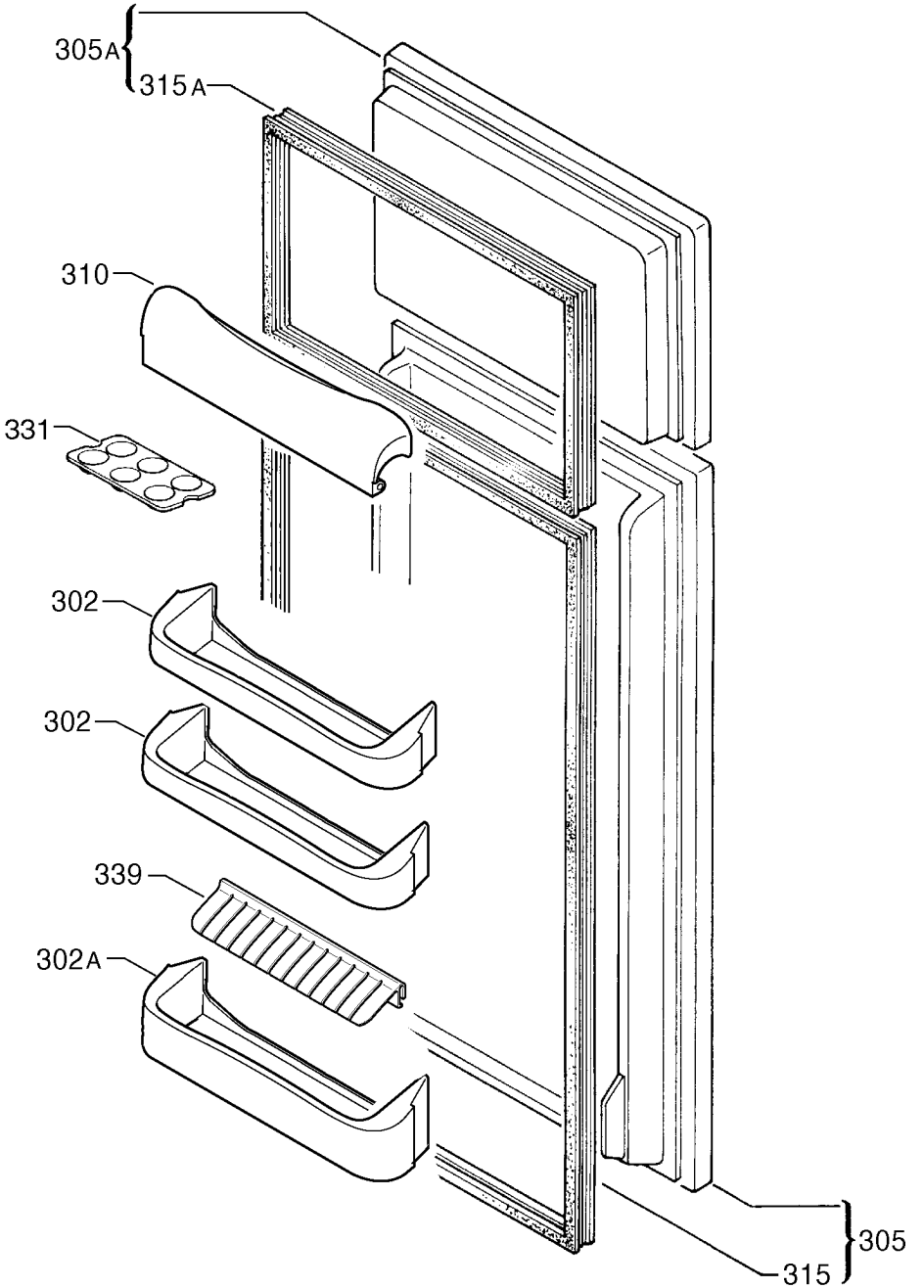

P09253030595