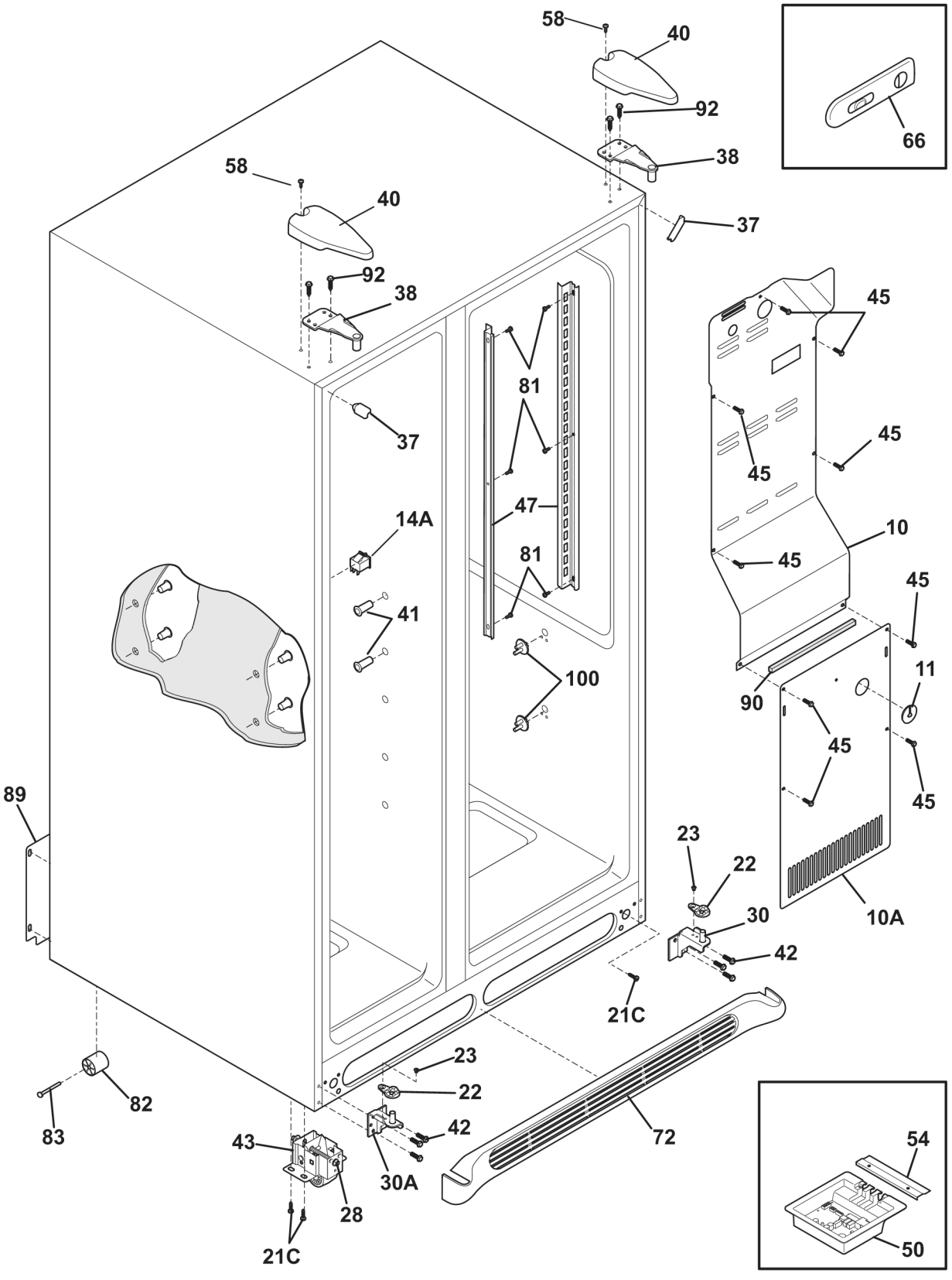

P09253027988