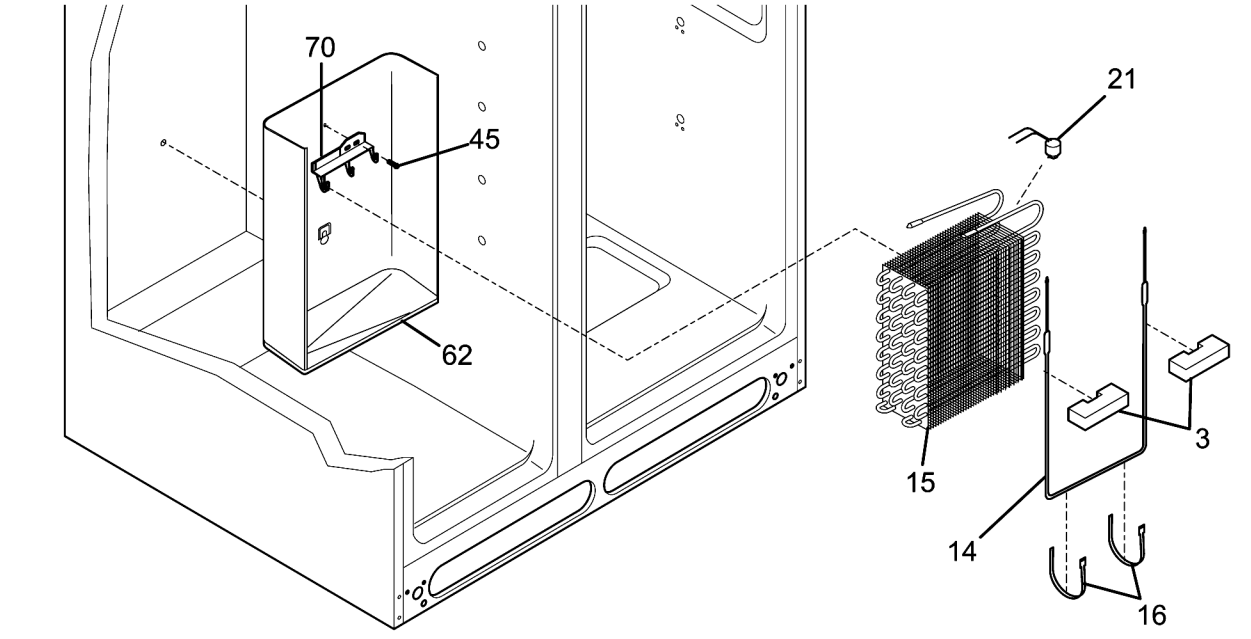

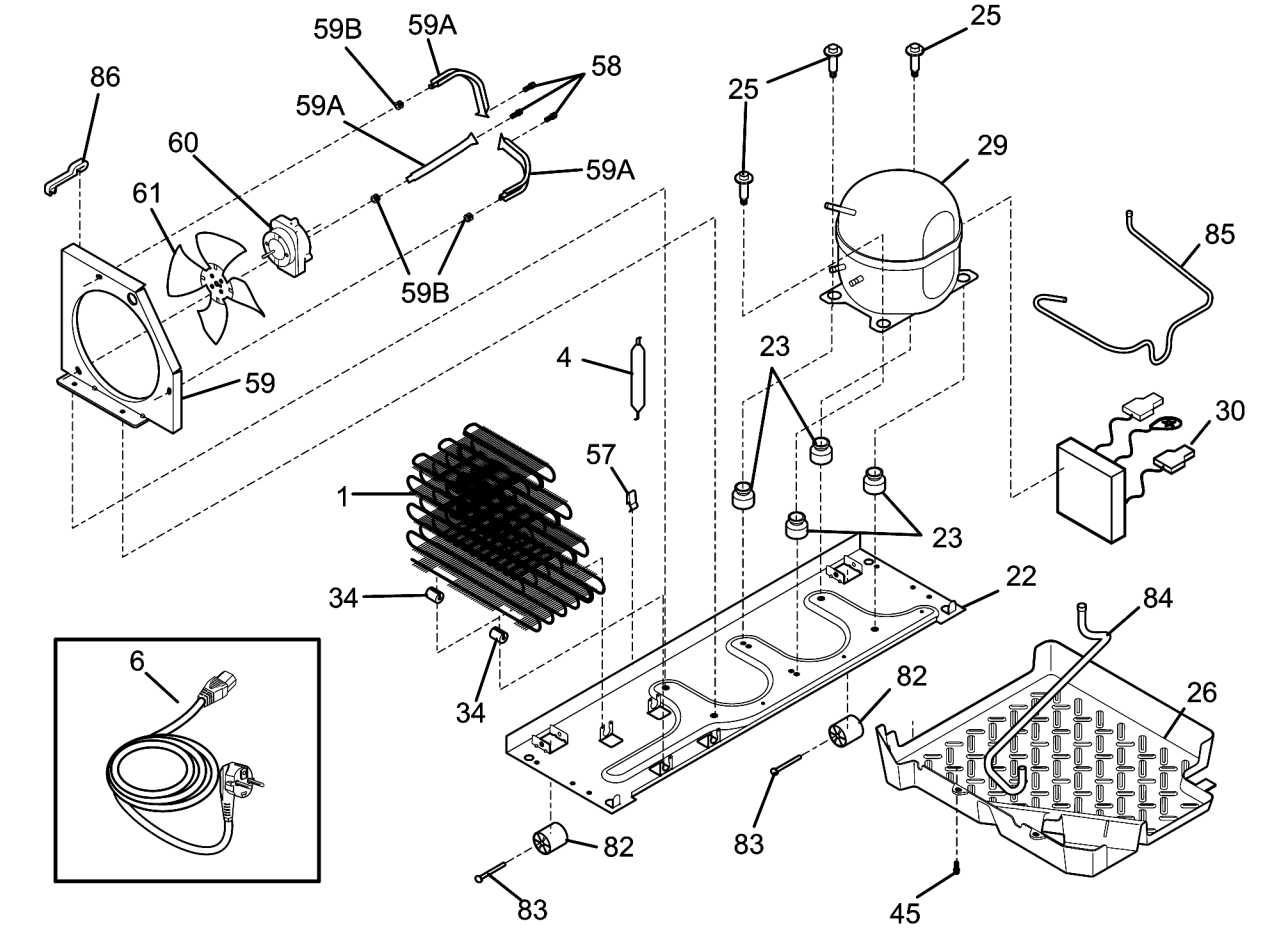

P09253027978