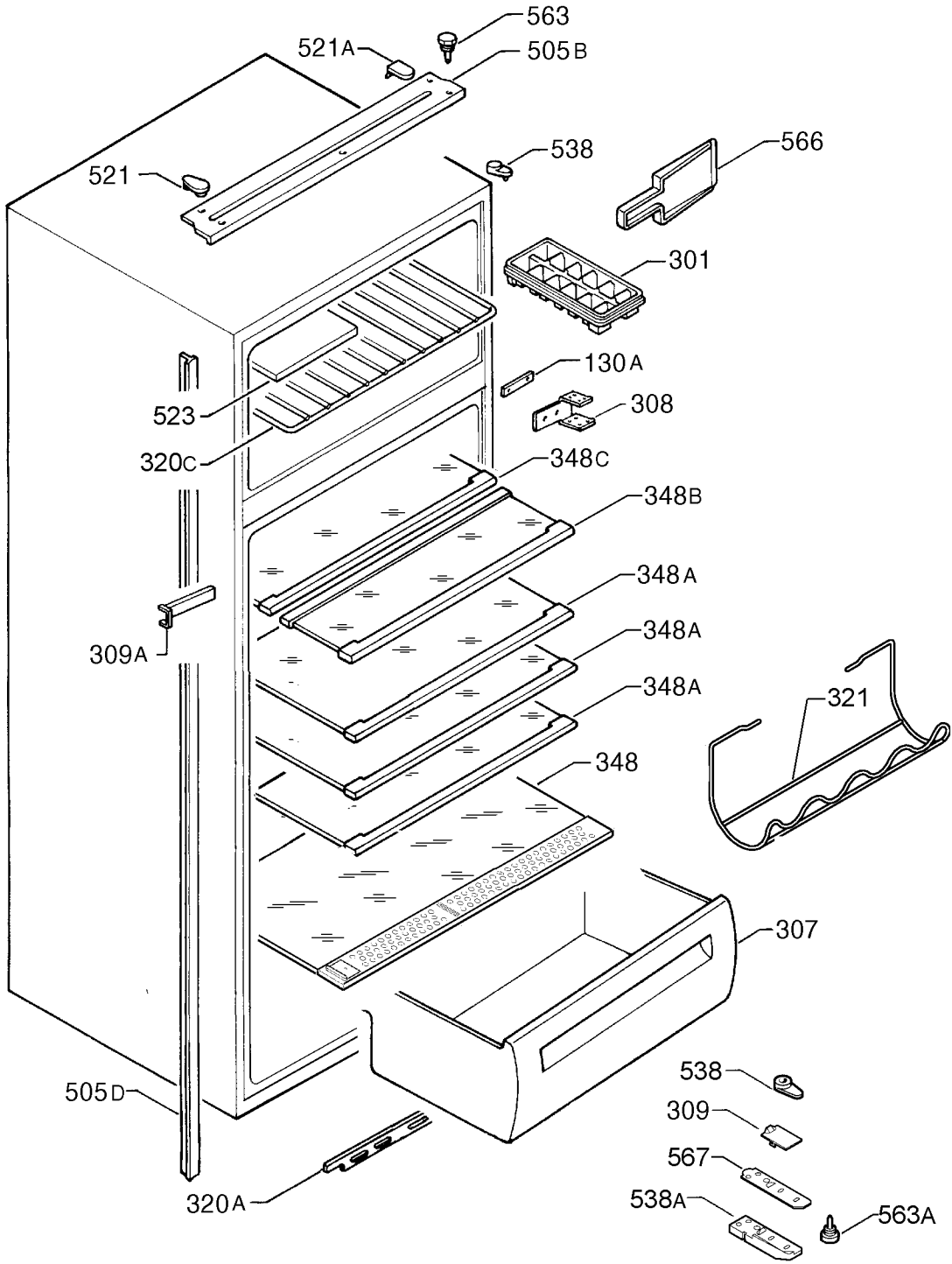

P09253025460