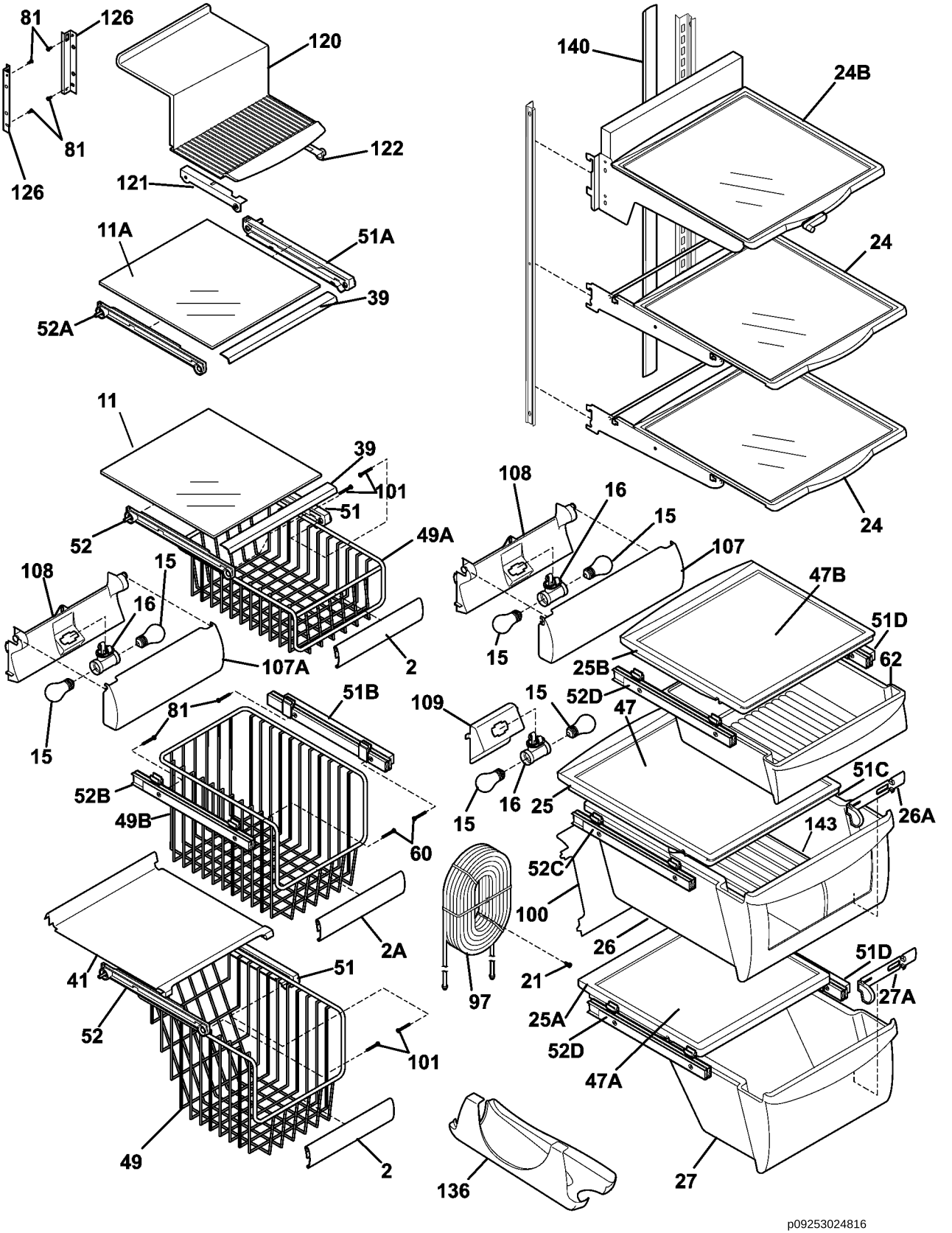


p09253024816