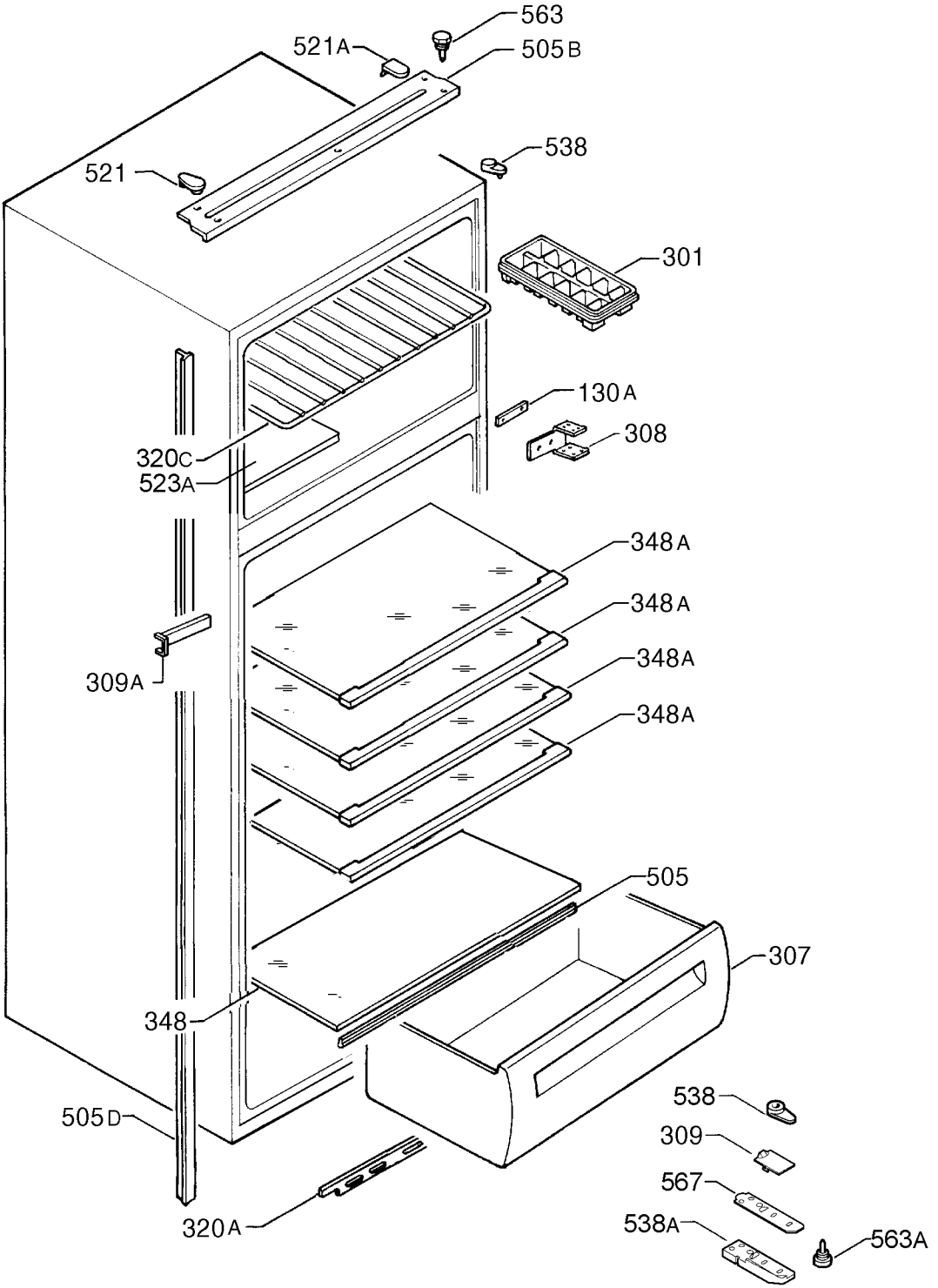

P09253024777