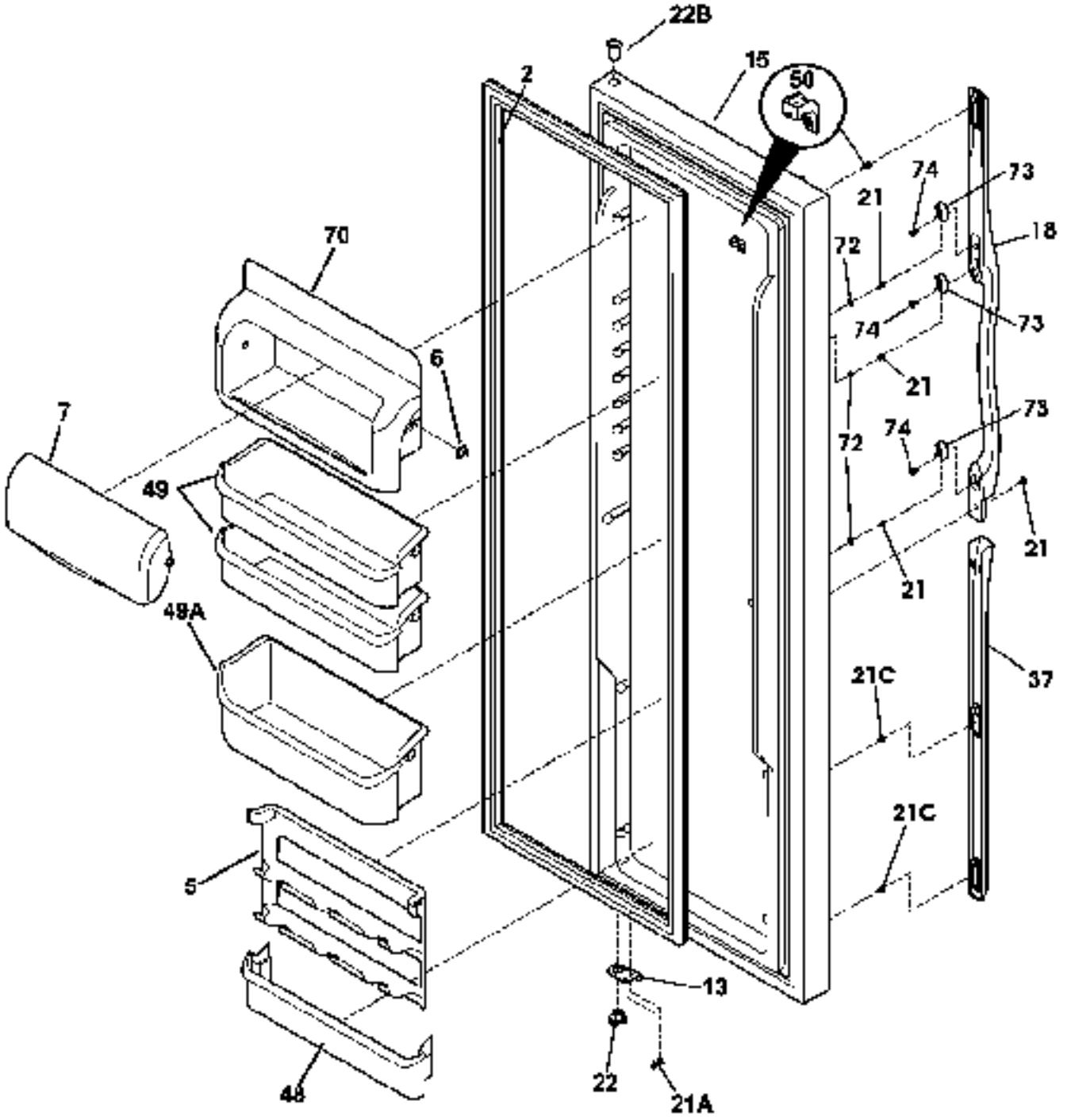

P09253023845