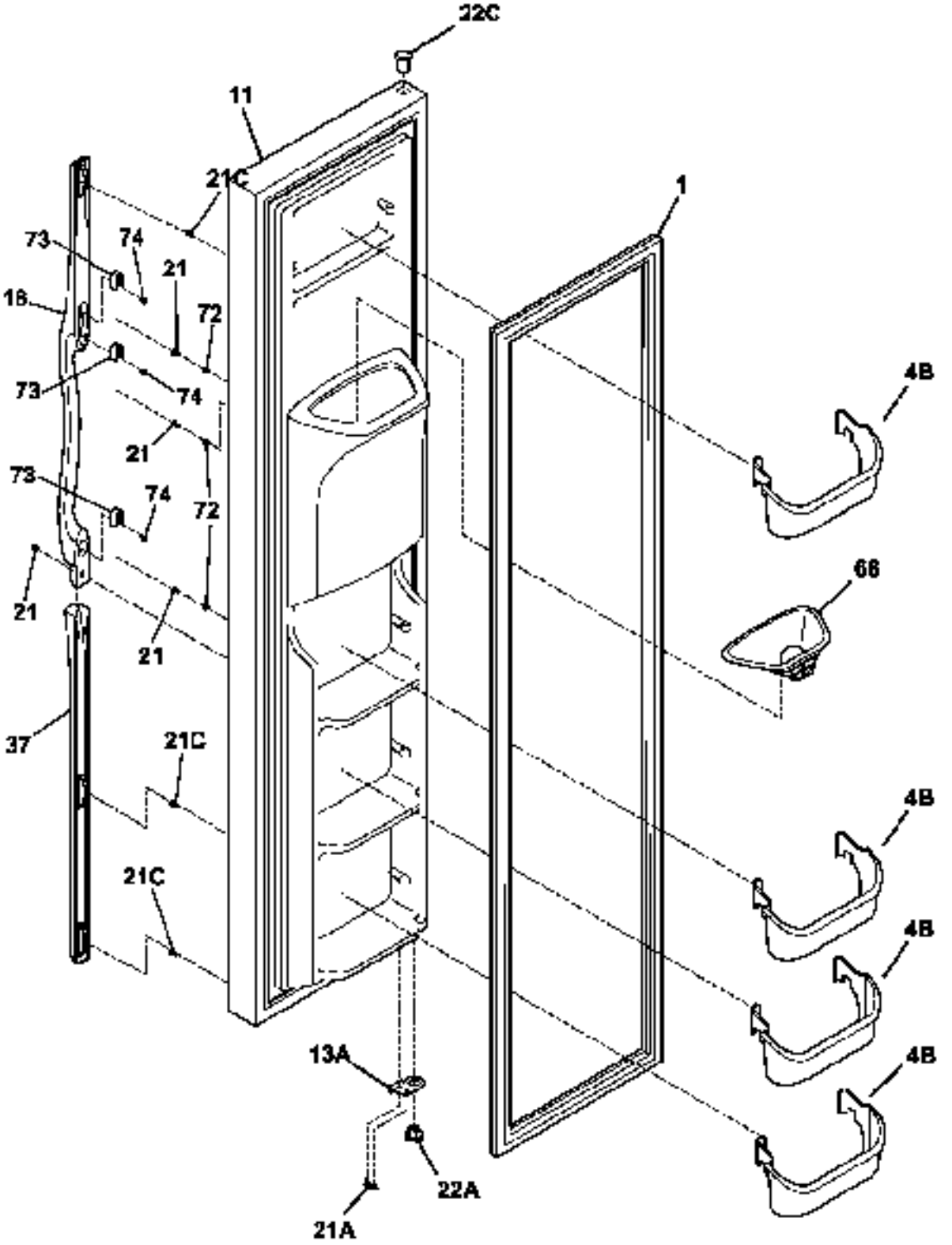

P09253023690