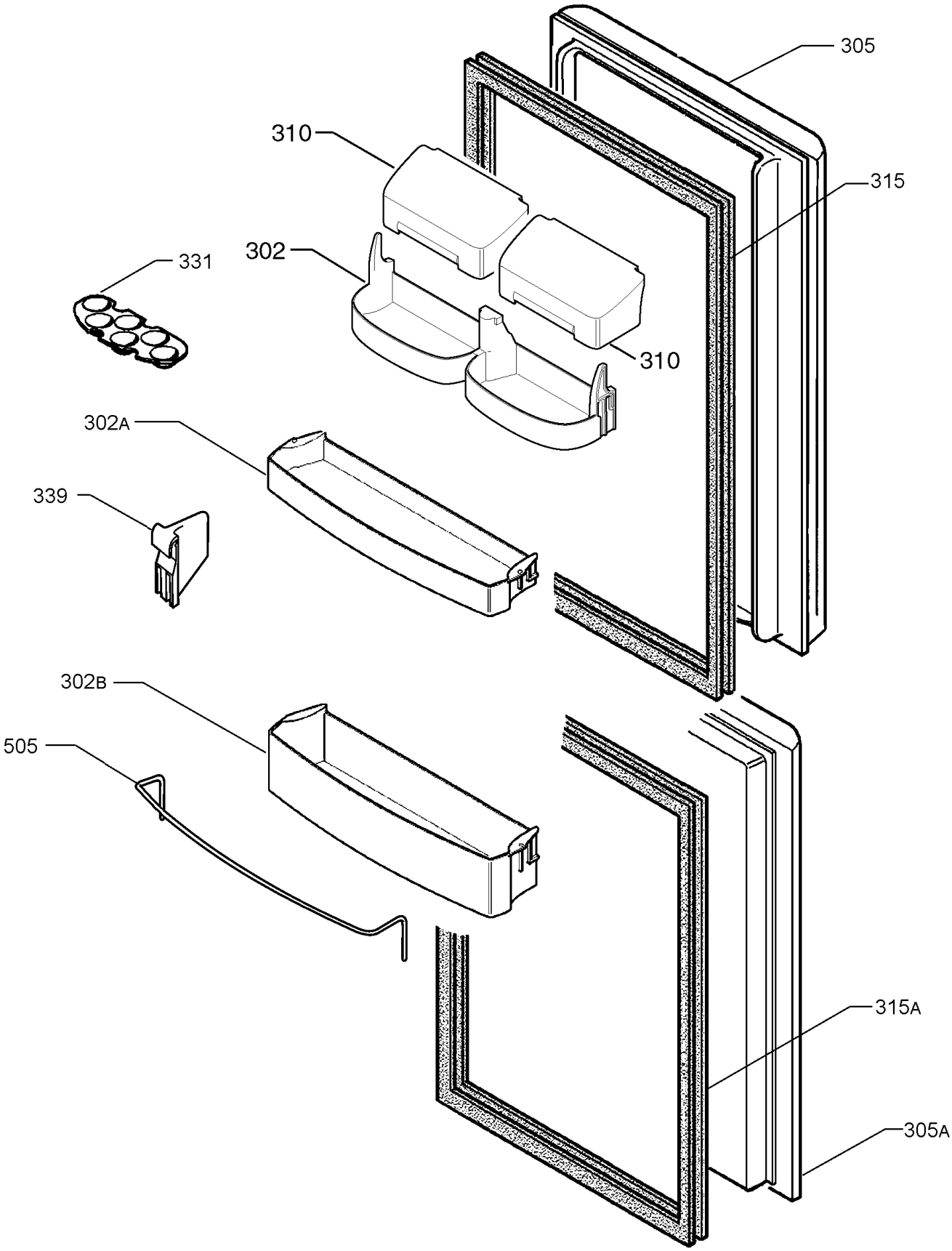


P09253021472