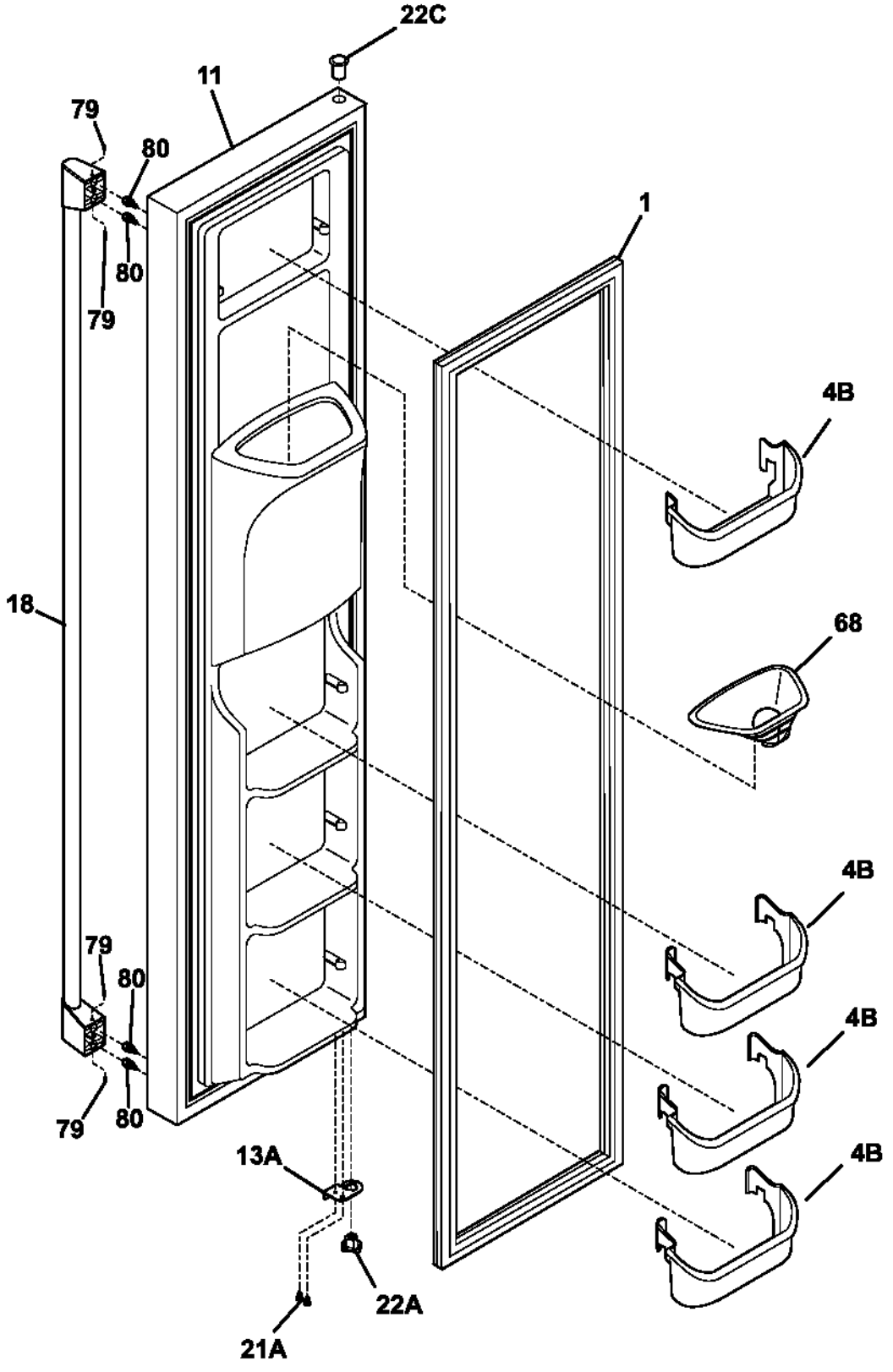

p09253020304