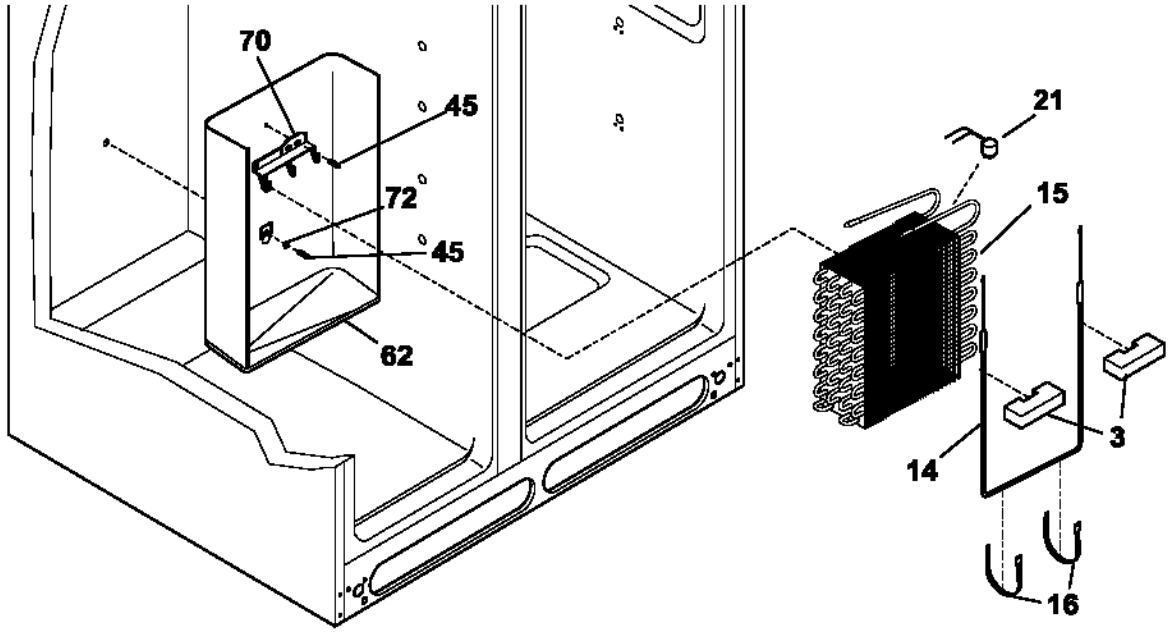

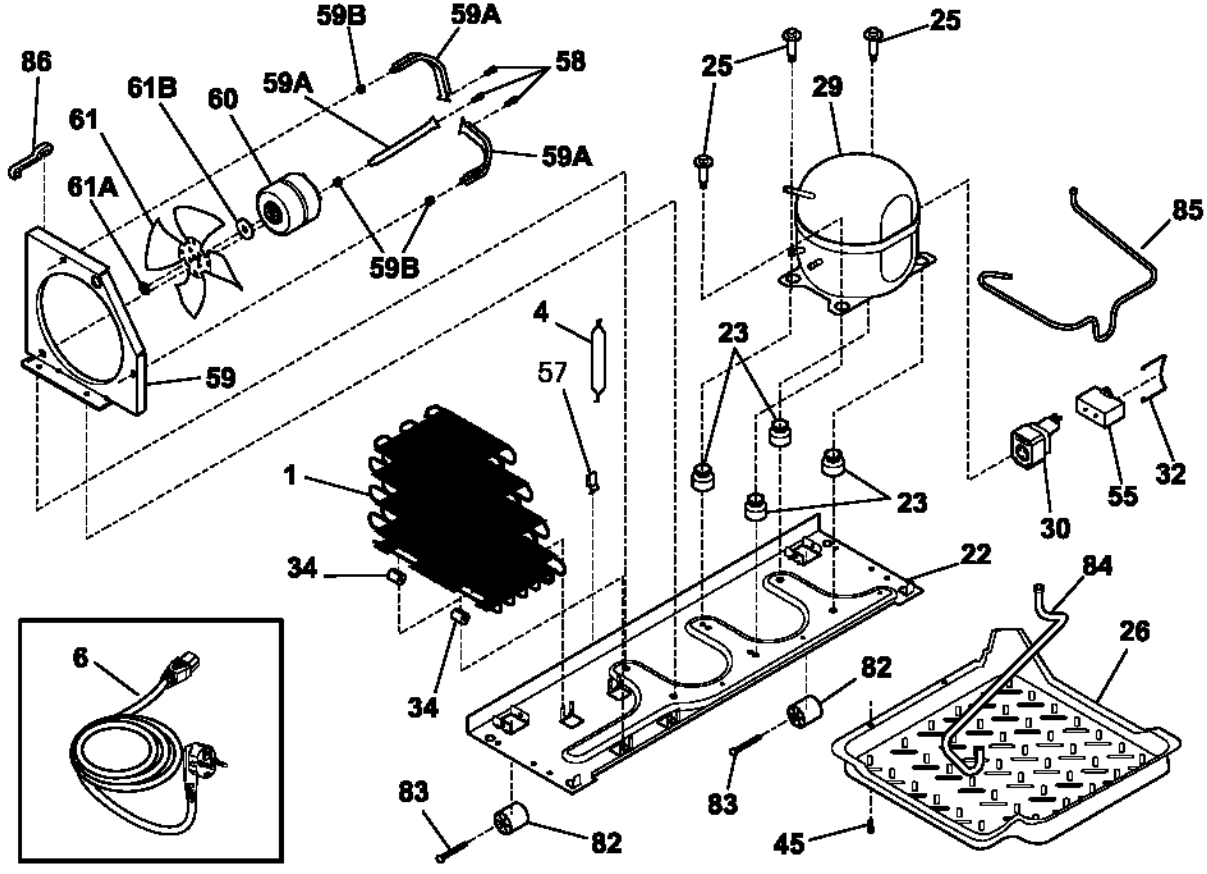

P09253020246