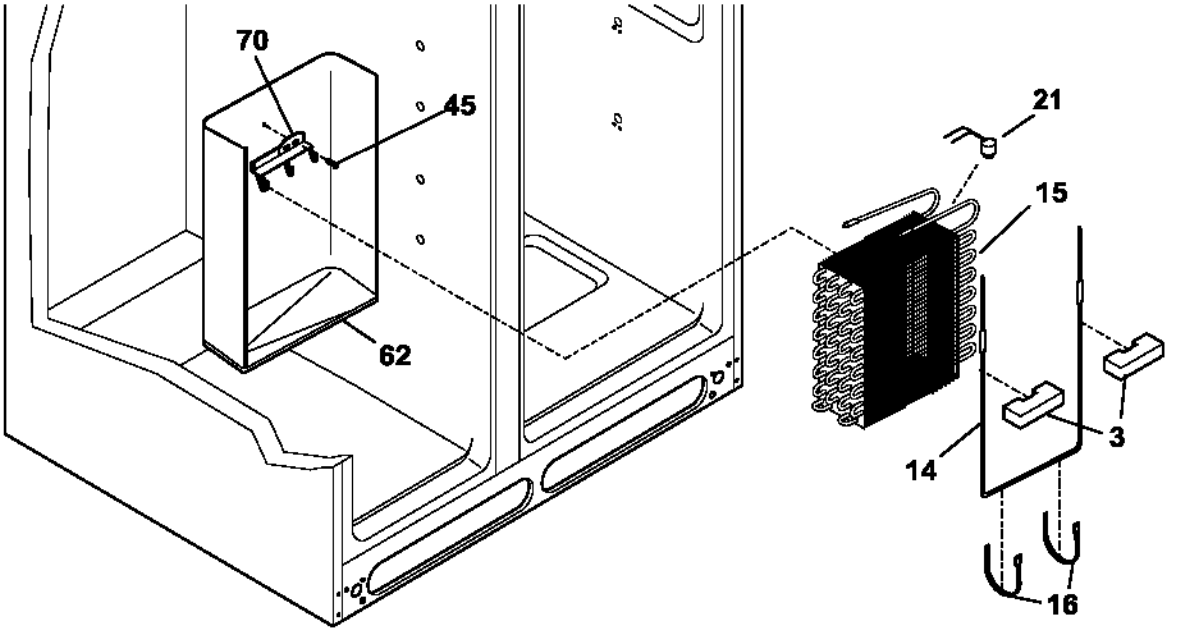

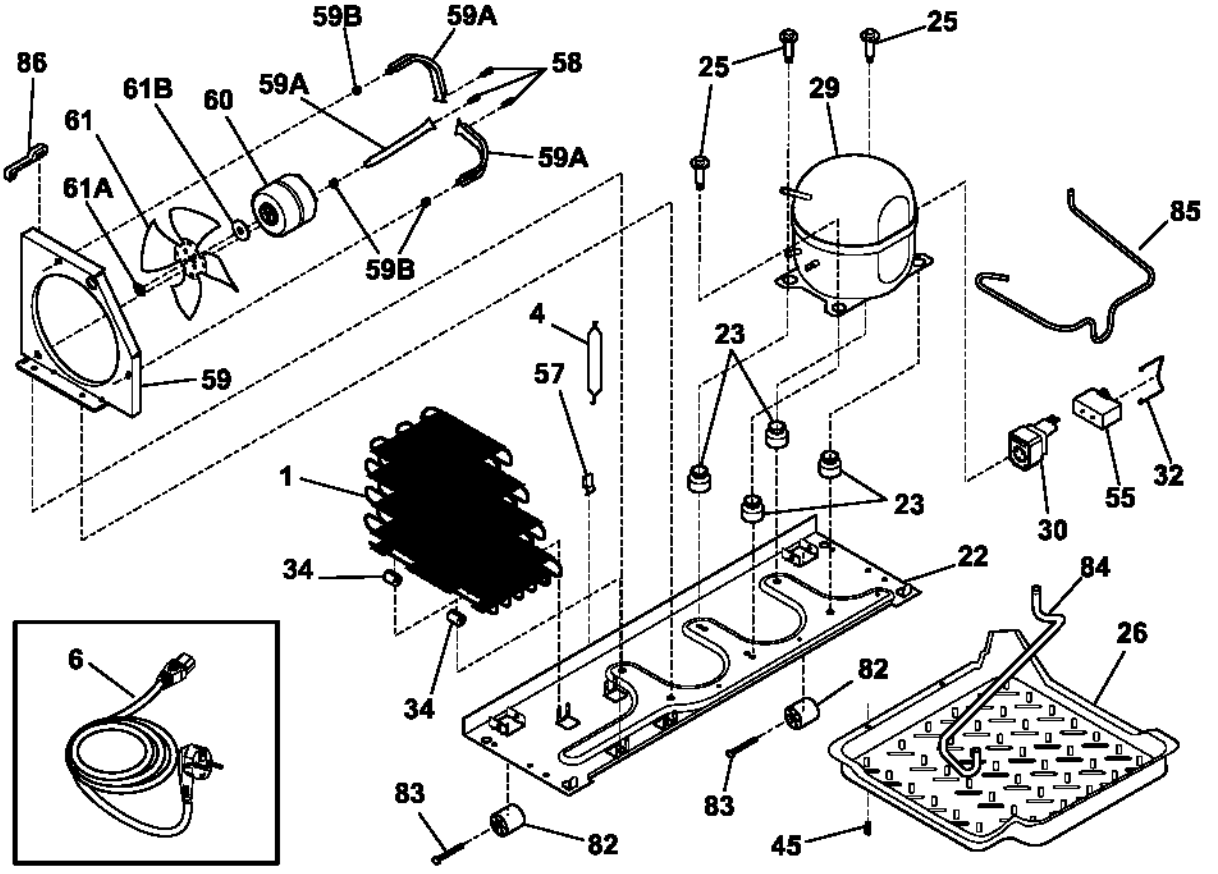

P09253020227