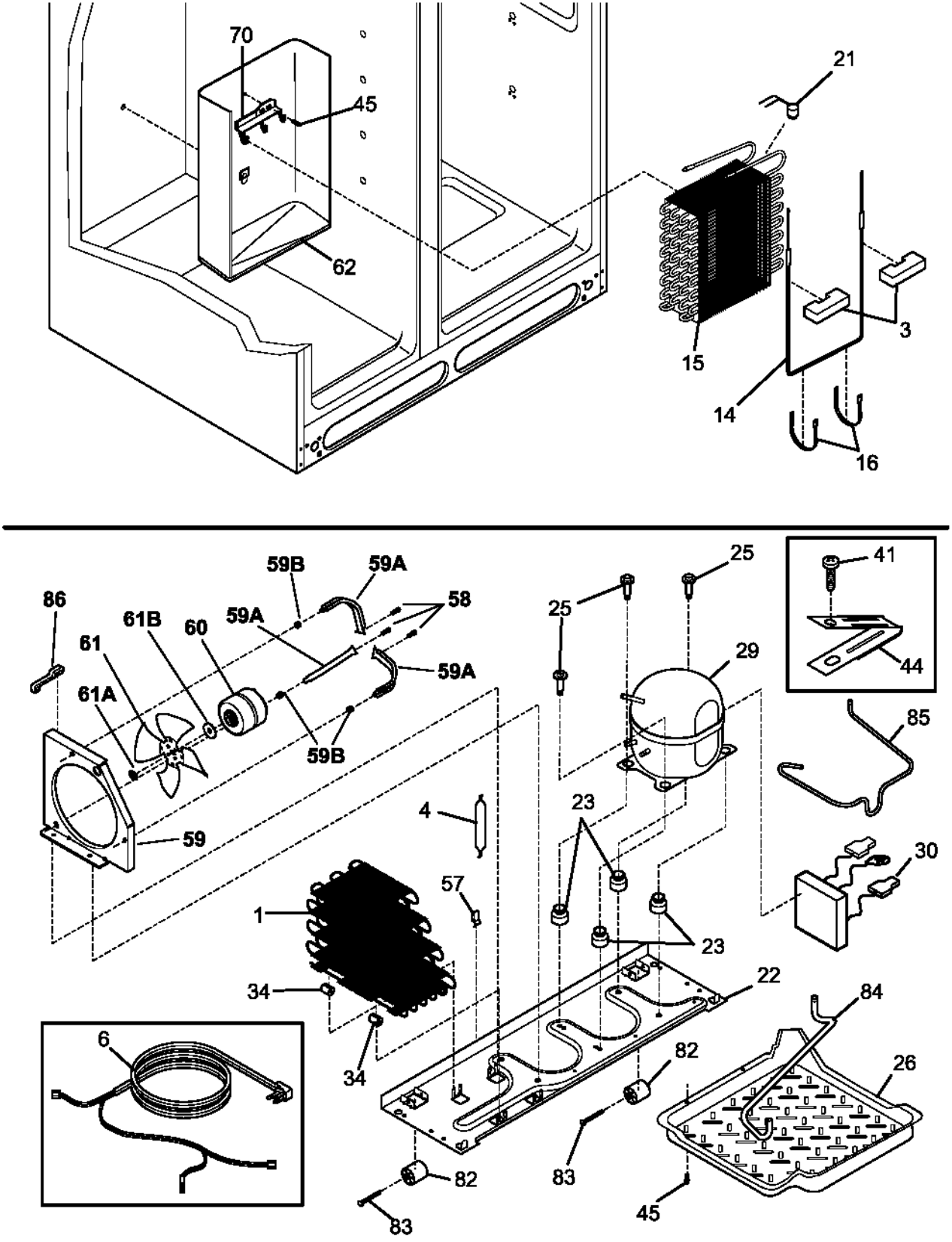

P09253020212