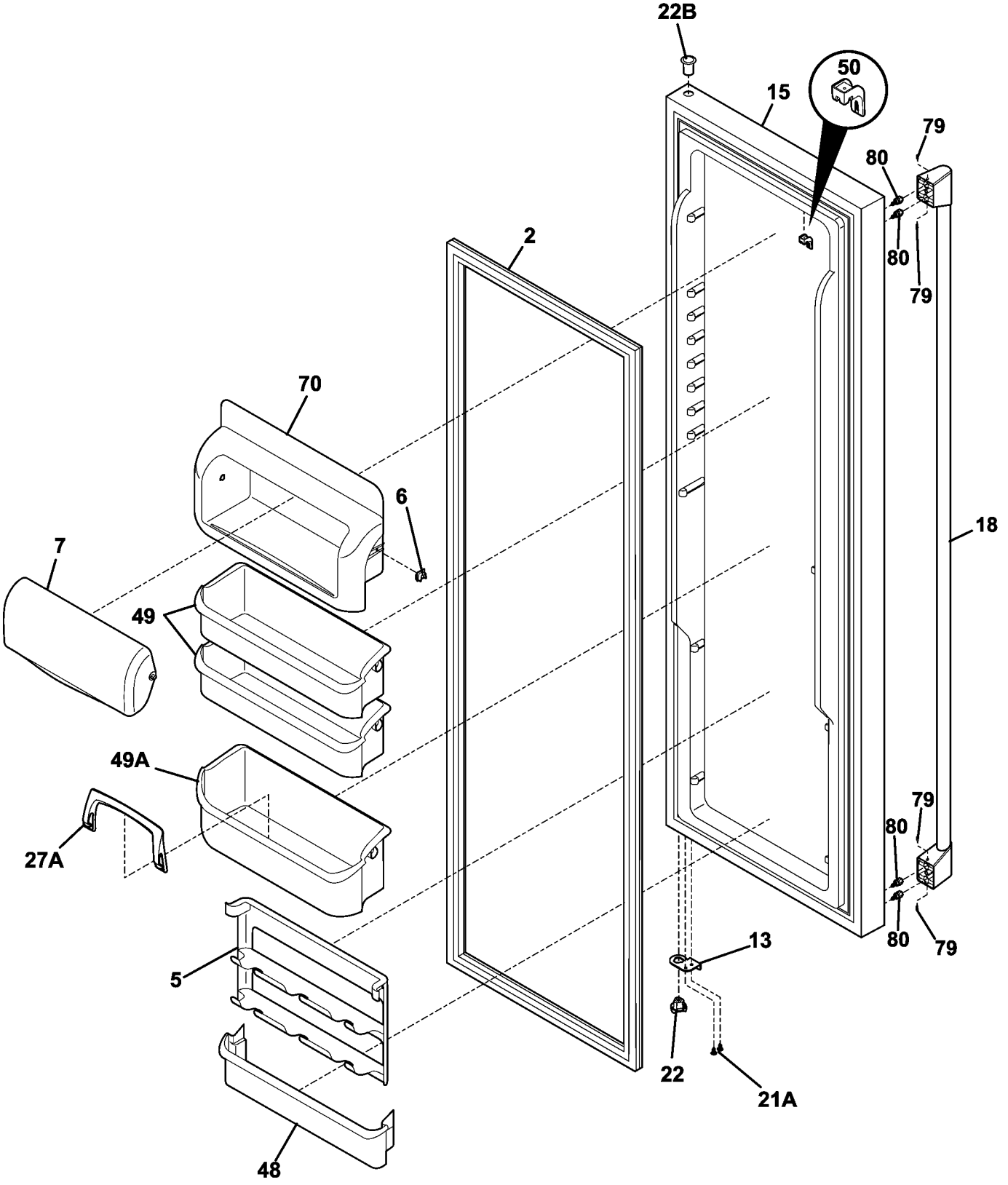

P09253018922